FUSCOE
ENGINEERING

PRELIMINARY
DRAINAGE STUDY

RANCHO CIELO PARCEL 'H'
EA LOG NO. 86-06-026B

APRIL 2013

County of San Diego, California

TM 5441

LOT 203, TM 4229-4, Map No. 12905

prepared for:

Rancho Cielo Estates
PO Box 2303
Rancho Santa Fe, CA 92067

Fuscoe Engineering, Inc.
6390 Greenwich Drive, Suite 170
San Diego, California 92122
858.554.1500

www.fuscoe.com

Kenneth T. Kozlik, PE
Job # 02711-001-01

full circle thinking®

FUSCOE
ENGINEERING

Irvine
San Diego
Ontario
Palm Springs
Los Angeles

April 15, 2013

Dennis Campbell
Land Use and Environmental Planner
THE COUNTY OF SAN DIEGO
DEPT. OF PLANNING AND LAND USE
5510 Overland Ave., Suite 310
San Diego, CA 92123

Rancho Cielo – SPA 3813 05-004, EA 3910-86-06-026B, TM 3100-5440, TM 3100-5441
Single Family Residential Site Plan

Mr. Campbell,

Enclosed please find the technical studies for TM 5440 and 5441, which have been revised to reflect the change from the single lot condominium site plan with 42 units to a single family residential site plan with 24 single family lots. The following studies are provided for your review:

- SWMP for TM 5440 and 5441 (Updated to August 2012 Major SWMP Template)
- Preliminary Drainage Studies for TM 5440 and 5441
- Preliminary Hydromodification Management Studies for TM 5440 and 5441

The revised studies are in substantial conformance with the studies which have been previously reviewed. In fact, due to the lower density of the proposed single family site plan, hydromodification and peak flow mitigation needs have been reduced and opportunities for LID BMPs have been increased, resulting in higher quality storm water treatment.

Please feel free to contact me with any questions or comments.

Sincerely,
FUSCOE ENGINEERING, INC.

Kenneth T. Kozlik, PE
Project Manager

Preliminary Drainage Study

For

Rancho Cielo Parcel 'H'

County of San Diego, CA

Prepared under the Responsible Charge of:

7/24/13

Kenneth T. Kozlik, P.E. RCE 71883 Date: EXP: 12-31-13

Fuscoe Engineering, San Diego, Inc.
6390 Greenwich Dr., Suite 170
San Diego, CA 92122

TABLE OF CONTENTS

SECTION	PAGE
Introduction	1
Purpose	1
Project Description	1
Basin Description	2
Methodology	3
Runoff Calculations	3
Detention Basin Sizing	7
Detention Basin Outlet Design	7
Calculations/Results	8
Existing Conditions	8
Proposed Conditions	8
Detention Basin	9
Conclusion	10

APPENDICES

1. Excerpts from County Hydrology Manual
2. Hydrology Calculations
   - 100-Year Storm Existing Conditions
   - 100-Year Storm Proposed Conditions
3. Detention Basin Calculations

Map Pocket: Existing 100-Year Hydrology Exhibit
Proposed 100-Year Hydrology Exhibit

REFERENCES

County Hydrology Manual (2003)

County of San Diego Standard Urban Stormwater Mitigation Plan (2011)

County of San Diego Drainage Design Manual (2005)

INTRODUCTION

PURPOSE

This Preliminary Drainage Study pertains to the proposed development of Rancho Cielo Parcel 'H' to the north of the intersection of Via Ambiente and El Brazo. Its purpose is to present the design of the drainage facilities of the proposed project located in the County of San Diego, CA.

PROJECT DESCRIPTION

The proposed development of Rancho Cielo Parcel 'H' consists of 17 lots for single family residences and a private street. An additional lot will be dedicated as open space. The project area consists of a portion of Lot 203 TM 4229-4 (Map No. 12905) and is located along Via Ambiente in the community of Rancho Cielo, to the north of Rancho Santa Fe, CA. Refer to the following Vicinity Map.

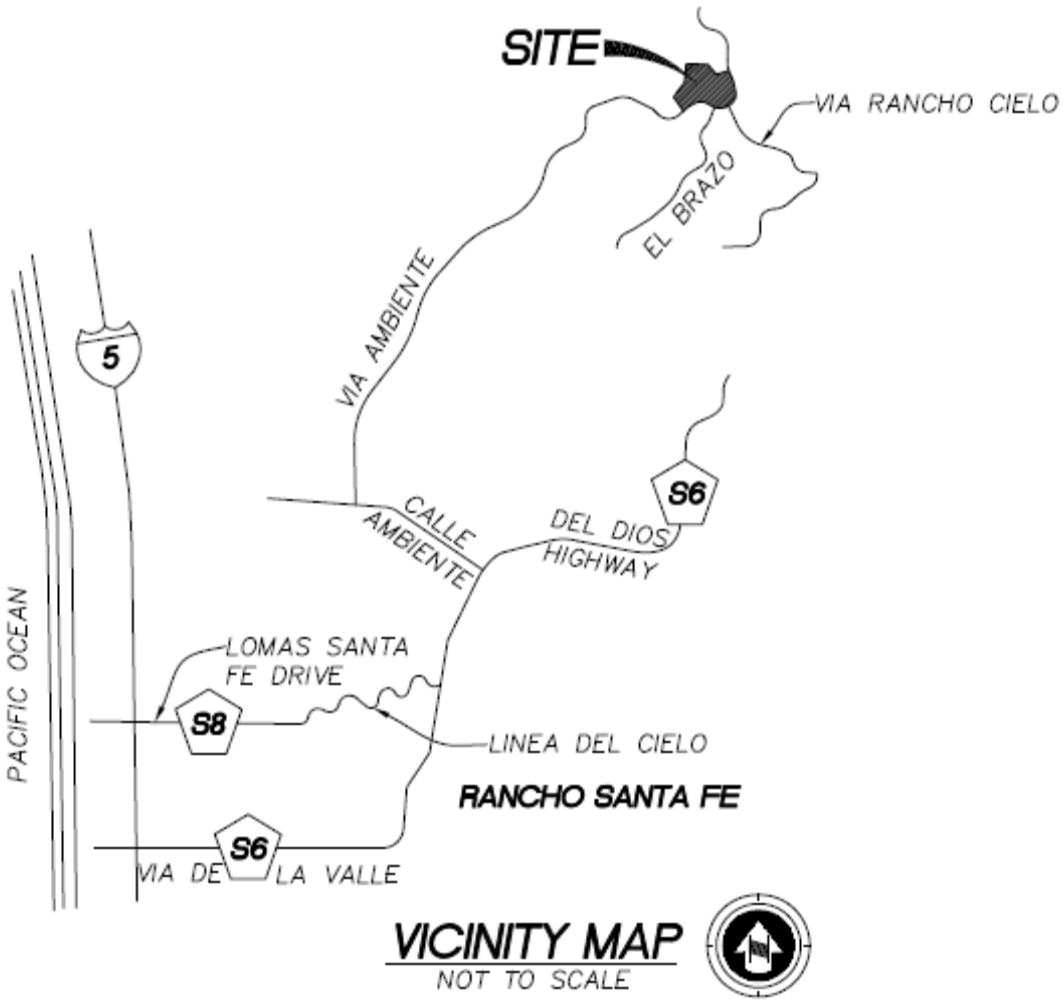

The project site is 14.42 acres. The existing site is characterized by a hilltop surrounded by steep slopes. Via Ambiente forms the southerly and easterly boundaries of the project. Low density residential development exists along a portion of the westerly project boundary,

while the remainder of the adjacent area is undeveloped. The proposed project will construct a driveway on Via Ambiente just west of the intersection with El Brazo. The residential lots will be accessed via private interior streets consisting of three cul-de-sacs.

BASIN DESCRIPTION

Existing Conditions:

Due to the hilltop nature of the site, runoff from the project site splits into several drainage basins.

Basin 1 encompasses the majority of the central and western portions of the site. This basin drains to a canyon onsite which drains to the northwest, conveying flows to a tributary to Escondido Creek, and then to Escondido Creek itself.

Basin 2 consists of the southeasterly portion of the site, including the frontage along Via Ambiente. Runoff from this basin is collected by a storm drain system which conveys flows to the east under Via Ambiente before discharging to the surface. The surface discharge then runs down a canyon to the valley to the east. The valley then drains northerly towards the tributary to Escondido Creek.

Basin 3 is located along the southerly frontage of the project to the west of El Brazo. Consisting largely of street drainage on Via Ambiente, the basin extends from a high point in the roadway to the west of the project to a catch basin near the intersection with El Brazo. The catch basin connects to an underground storm drain system which outlets to a canyon to the southeast of the intersection of Via Ambiente and El Brazo. This canyon flows southwest to a confluence with the San Dieguito River.

Basins 4 and 5 consist of small portions of the northeasterly corner and north central portions of the site, respectively. These areas drain northeasterly to a storm drains which cross Via Ambiente and discharge to a canyon to the northeast of the site. This canyon flows east to the adjacent valley, which then drains north to the tributary of Escondido Creek.

Please refer to the "Existing 100-Year Hydrology Exhibit" for a graphical depiction of these drainage patterns.

Proposed Conditions:

The proposed development will maintain the existing drainage patterns. The site will continue to be split among five drainage basins. Although the areas of the proposed drainage basins will not match the existing conditions exactly, diversion between basins has been limited as much as possible.

The majority of the proposed development will occur in Basin 1, where two separate storm drain systems and outlet points are proposed. Curb inlets near the project entrance will convey runoff from the southeasterly portion of Basin 1 to an extended detention/hydromodification Integrated Management Practice (IMP). The basin will

discharge to the existing canyon within Basin 1. The northeasterly portion of Basin 1 will drain to the northerly cul-de-sacs, where runoff will be collected by curb inlets and conveyed to an extended detention/hydromodification/peak detention IMP near the toe of the slope to the northwest. This IMP will discharge to the west, where flows will travel down the slope to the existing canyon.

The majority of the remaining development will drain to Basin 2. The residential lots in Basin 2 will drain towards bioretention IMPs in their rear for hydromodification mitigation and storm water treatment. Outflow from the bioretention basins will then be conveyed by a combination of underground storm drain and concrete ditches to an existing storm drain inlet along Via Ambiente. This inlet will also continue to collect slope and street drainage.

Basin 3 will remain largely the same as the existing condition, with the addition of some runoff from the project entrance and the loss of some slope area to Basin 1.

Portions of Basin 4 will continue to sheet flow off the site to the northeast. A retaining wall will be constructed along the property line in Basin 5. Runoff from Basin 5 will be conveyed by a brow ditch behind the wall to a catch basin. Runoff will then be discharged north of the wall, where it will continue to flow north as in the existing condition.

Please refer to the "Proposed 100-Year Hydrology Exhibit" for a graphical depiction of these drainage patterns.

METHODOLOGY

RUNOFF CALCULATIONS

The design criteria, as found in the County of San Diego Department of Public Works Flood Control Division Hydrology Manual, specifies the design runoff conditions within the San Diego County Flood Control District will be based on the 100-year storm frequency, as follows:

1.) Design for areas over 1 square mile will be based on the 100-year frequency storm.
2.) For areas under 1 square mile –
    a. The storm drain system shall be designed so that the combination of storm drain system capacity and overflow both inside and outside the right of way will be able to carry the 100 year frequency storm without damaging adjacent existing buildings or potential building sites.
    b. The storm drain system shall be designed so that the combination of storm drain system capacity and allowable street overflow will be able to carry the 50 year frequency storm without damaging adjacent property.
    c. Where a storm drain is required under headings 1 or 2 above, then as a minimum, the drain shall be designed to carry the 10-year frequency storm.

3.) Sump areas are to be designed for a sump capacity or outfall of a 100-year frequency storm.

Runoff produced on the project site will be calculated for the 100-year storm event using the methodology outlined in the San Diego County Hydrology Manual. Runoff will be calculated using the Rational Method, which is given by the following equation:

$Q = C \times I \times A$

Where:
Q = Flow rate in cubic feet per second (cfs)
C = Runoff coefficient
I = Rainfall Intensity in inches per hour (in/hr)
A = Drainage basin area in acres, (ac)

Soil Type – Hydrologic soil group D was assumed for all areas as this is the prevalent soil group near the project site as can be seen in the Soil Hydrologic Groups map provided in the appendix. Group D soils have very slow infiltration rates when thoroughly wetted. Consisting chiefly of clay soils with a high swelling potential, soils with a high permanent water table, soils with clay pan or clay layer at or near the surface, and shallow soils over nearly impervious materials, Group D soils have a very slow rate of water transmission.

Runoff Coefficient – In accordance with the County of San Diego standards, pervious areas were assigned a runoff coefficient of C= 0.35, based on the type D soils. Where a sub-basin consists of a mixture of pervious and impervious surfaces, a weighted runoff coefficient was calculated using the following equation, based on Section 3.1.2 of the manual:

$C = 0.90 \times (\%\ \text{Impervious}) + 0.35 \times (1 - \%\ \text{Impervious})$

Since building footprints are not available due to the preliminary nature of this study, the impervious area on the building pads is based on the density of the proposed pads. The pads have a minimum size of 10,000 sf, giving a density of 4.3 du/ac. Per Table 3-1 of the manual, residential land uses at a density of 4.3 du/ac contain an average imperviousness of 30%. This imperviousness percentage is applied to the pad areas to determine the amount of impervious area on each lot. A summary of the runoff coefficient calculations are contained in the following table.

Condition	Nodes	Areas (ac)			% Impervious	Weighted C
		Total	Pervious	Impervious		
Existing	203-205	1.34	0.95	0.39	29	0.51
	301-302	0.04	0.00	0.04	100	0.90
	302-303	0.67	0.31	0.36	46	0.60
Proposed	104-105	0.06	0.03	0.03	50	0.63
	105-106	0.22	0.14	0.08	36	0.55
	108-109	0.35	0.23	0.12	35	0.54
	112-121	4.04	3.97	0.07	2	0.36
	114-115	0.97	0.52	0.46	47	0.61
	116-117	0.06	0.03	0.03	50	0.63
	117-118	2.11	1.31	0.80	38	0.56
	201-202	0.12	0.08	0.04	33	0.53
	202-205	0.19	0.12	0.07	37	0.55
	205-210	1.11	0.77	0.35	31	0.52
	207-210	0.93	0.80	0.14	15	0.43

Rainfall intensity was calculated using the following equation, which is given in the Manual:

$I = 7.44 \times P_6 \times (Tc^{-0.645})$

Where:
I = Rainfall Intensity in inches per hour (in/hr)
P_6 = Rainfall in inches for the 6-hour storm event
Tc = Time of concentration in minutes

Time of concentration was calculated for overland flow areas (sheet drainage) using the equation developed by the Federal Aviation Administration, which is given as:

$Tc = [1.8 \times (1.1 - C) \times (L^{1/2})] / (S^{1/3})$

Where:
Tc = Time of concentration in minutes
C = Runoff coefficient
L = Length of travel of runoff in feet
S = Slope in percent

The minimum time of concentration used for runoff calculations was based on Table 3-2 of the Manual. Relevant excerpts from the Manual are given in the appendix.

Time of travel in the drain and drainage channels was calculated using the Manning equation. For HDPE storm drains, a Manning "n" value of 0.012 was selected, while for RCP storm drains a Manning "n" value of 0.013 was used. For brow ditches, a Manning "n" of 0.015 was used.

To perform a node-link study, the total watershed area is divided into sub-areas which discharge at designated nodes.

The procedure for the sub-area summation model is as follows:

(1) Subdivide the watershed into an initial sub-area (generally 1 lot) and subsequent sub-areas, which are generally less than 10 acres in size. Assign upstream and downstream node numbers to each sub-area.
(2) Estimate an initial T_c by using the appropriate nomograph or overland flow velocity estimation.
(3) Using the initial T_c, determine the corresponding values of I. Then Q = CIA.
(4) Using Q, estimate the travel time between this node and the next by Manning's equation as applied to particular channel or conduit linking the two nodes. Then, repeat the calculation for Q based on the revised intensity (which is a function of the revised time of concentration)

The nodes are joined together by links, which may be street gutter flows, drainage swales, drainage ditches, pipe flow, or various channel flows. The AES-2004a computer sub-area menu is as follows:

SUBAREA HYDROLOGIC PROCESS

1. Confluence analysis at node.
2. Initial sub-area analysis (including time of concentration calculation).
3. Pipe flow travel time (computer estimated).
4. Pipe flow travel time (user specified).
5. Trapezoidal channel travel time.
6. Street flow analysis through sub-area.
7. User-specified information at node.
8. Addition of sub-area runoff to main line.
9. V-gutter flow through area.
10. Copy main stream data to memory bank
11. Confluence main stream data with a memory bank
12. Clear a memory bank

At the confluence point of two or more basins, the following procedure is used to combine peak flow rates to account for differences in the basin's times of concentration. This adjustment is based on the assumption that each basin's hydrographs are triangular in shape.

(1).If the collection streams have the same times of concentration, then the Q values are directly summed,

$$Q_p = Q_a + Q_b; T_p = T_a = T_b$$

(2).If the collection streams have different times of concentration, the smaller of the tributary Q values may be adjusted as follows:

(i). The most frequent case is where the collection stream with the longer time of concentration has the larger Q. The smaller Q value is adjusted by a ratio of rainfall intensities.

$$Q_p = Q_b + Q_a (I_b/I_a);\ T_p = T_a$$

(ii). In some cases, the collection stream with the shorter time of concentration has the larger Q. Then the smaller Q is adjusted by a ratio of the T values.

$$Q_p = Q_b + Q_a (T_b/T_a);\ T_p = T_b$$

DETENTION BASIN SIZING

To mitigate for the increased peak flows due to the development, one peak detention basin is proposed. The required volume of the detention basin was determined as follows:

1) The inflow hydrograph for the peak discharge of the 100-year 6-hour storm event was calculated using the Rational Method Hydrograph program developed by Rick Engineering.
2) The maximum outflow from the detention basin was determined based on the allowable downstream peak discharge.
3) Determine Stage/Storage/Discharge table based on basin geometry and proposed outlet structure.
4) The outflow hydrograph was developed through the use of the Hydraulic Elements II Retarding Basin Routing version 10.0 developed by AES.

Calculations and results of the detention basin sizing can be found in Appendix 3.

DETENTION BASIN OUTLET DESIGN

The detention basin outlet consists of round orifice openings in the side of a grated catch basin. The size and elevation of the orifice openings and the elevation of the grate inlet have been designed such that the 100-year water surface elevation will not reach the grate inlet, and the orifice openings will release runoff at rates at or below the existing condition peak flows. The grate inlet will serve as emergency overflow in the event of the clogging of one or more of the orifice openings. To determine the rate of release for various depths within the detention basin, orifice calculations were performed. Flow discharged through an orifice was calculated using the orifice equation, given as:

$$Qo = Co \times Ao \times (2 \times g \times Ho)^{1/2}$$

Where:
Qo = Flow rate through the orifice in cfs

Co = Coefficient accounting for entrance loss to the orifice (0.6 assumed)
Ao = Area of the orifice in square feet
g = Gravitational acceleration equal to 32.2 feet per second per second
Ho = Head acting on the orifice in feet

Results of these calculations can be found in the appendix.

CALCULATIONS/RESULTS

EXISTING CONDITIONS

Calculations were performed on the existing drainage patterns on the project site to determine the current discharge during a storm event. These calculations were performed based on the 100-year 6 hour storm event. The following table summarizes the peak discharge for each storm event at the basin discharge points. Please refer to the Existing 100-Year Hydrology Exhibit, and the hydrology calculations can be found in Appendix 2.

Basin	Area (ac)	100-Year Storm	
		Q (cfs)	T_c (min)
1	7.92	13.7	10.9
2	4.28	9.2	9.2
3	0.71	3.4	5.5
4	0.85	1.7	8.4
5	1.01	2.2	7.7

PROPOSED CONDITIONS

To analyze the effects of the proposed development on the downstream channels and storm drain system, an analysis of the proposed storm drain system was performed. These calculations were also performed based on the 100-year 6 hour storm event. The following table lists the peak discharge for each storm event at the basin discharge points. As can be seen in the table, the peak discharge in Basin 1 will increase due to development, while the peak discharge from Basins 2, 3, 4 and 5 will decrease. Please refer to the Proposed 100-Year Hydrology Exhibit, and the hydrology calculations can be found in Appendix 2.

Basin	Area (ac)	100-Year Storm	
		Q (cfs)	T_c (min)
1	10.13	26.1	8.6
2	3.73	8.6	8.5
3	0.61	3.3	5.5
4	0.14	0.4	5.6
5	0.17	0.5	4.8

Although some of the developed portion of the project drains to Basin 2, the peak discharge to this basin is reduced since the area of the basin is slightly less than in the existing conditions. The increased discharge from the project site in Basin 1 is due primarily to the increased amount of impervious area and slightly increased area in this

basin. To mitigate this effect, a peak detention basin will be constructed at nodes 119 in Basin 1. As described previously, this will be a multi-function basin which will also provide storm water treatment as an extended detention basin and hydromodification flow control. Please refer to the Preliminary Hydromodification Management Study and Storm Water Management Plan for further discussion of these aspects of the IMPs. The detention basin at node 119 in Basin 1 has been designated as IMP 1.1. There is also an IMP located at node 110 in Basin 1 (IMP 1.2); however, this basin is sized for storm water treatment and hydromodification flow control only, and not for peak detention. The detention basin has been sized to limit the peak discharge from Basin 1 to pre-development levels for the 100-year storm. The design and functioning of the detention basin will be discussed further in the following section. The following table lists the peak discharges from Basin 1 after accounting for the detentions basins, which is a slight decrease from existing conditions.

Basin	Area (ac)	100-Year Storm	
		Q (cfs)	T_c (min)
1	10.13	13.6	8.6

DETENTION BASIN

To mitigate the increased discharge in Basin 1, detention basins will be provided at node 119 (IMP 1.1). IMP 1.1 will collect and detain runoff from the northeasterly portion of Basin 1, and outlet to the existing hillside to the west. In order to prevent erosion of this hillside, a level spreader will be constructed at the outlet of this basin to mimic the existing sheet flow conditions. The detention basin has been sized so that the existing 100-year peak flow rate will be matched at the discharge points of the basin. Thus, the proposed development will not increase the 100-year discharge to adjacent properties.

Post-developed flow at the discharge point of Basin 1, with no detention, has been calculated to be 26.1 cfs, an increase of 12.4 cfs over existing conditions. To mitigate this increase, discharge from IMP 1.1 will be limited to a maximum of 1.0 cfs, a decrease of 12.5 cfs. When accounting for detention, the peak flow from Basin 1 will therefore be 13.6 cfs, which is slightly lower than the existing condition.

To provide this level of mitigation, IMP 1.1 has been designed as a 0.41 ac-ft detention basin. The detention basin has 2:1 side slopes and will accept flow from the storm drain system to the northeast and the slopes to the east. The bottom of the basin is at an elevation of 1091. The basin will discharge through a series of orifice openings, which have been sized for the multi-function nature of the basin. A 1.5" diameter orifice will be provided at the bottom of the pond, and a 5" diameter orifice will be provided at a depth of 3.5'. During the 100-year storm event, the basin will fill to a depth of approximately 5.25 feet. At this depth, the outflow from the basin through the outlet structure will be 1.0 cfs. If the outlet orifices become clogged, an emergency overflow will be provided in the form of a grated catch basin, with a grate elevation of 1096.25. The emergency overflow will be designed to pass the undetained 100-year peak flow at node 119 of 13.5 cfs.

Refer to Appendix 3 for detailed detention basin calculations and a schematic detail of the outlet structure.

CONCLUSION

The storm drain system for Rancho Cielo Parcel 'H' has been designed for the 100-year storm event. Due to the impervious areas included in the proposed residential development, discharge from Basin 1 will increase from the existing condition to the proposed condition. A peak detention basin has been provided in this basin to limit the peak discharge to the existing peak discharge before exiting the project site. The following table summarizes the existing and proposed 100-year peak runoff for the drainage basins within the project site.

Basin	Existing Q(100) (cfs)	Proposed Q (100) (cfs)
1	13.7	13.6
2	9.2	8.6
3	3.4	3.3
4	1.7	0.4
5	2.2	0.5

For discussions of the hydromodification and storm water quality aspects of the project, please refer to the Preliminary Hydromodification Management Study and the Storm Water Management Plan, respectively.

APPENDIX 1

Excerpts from County Hydrology Manual

County of San Diego Hydrology Manual

Soil Hydrologic Groups

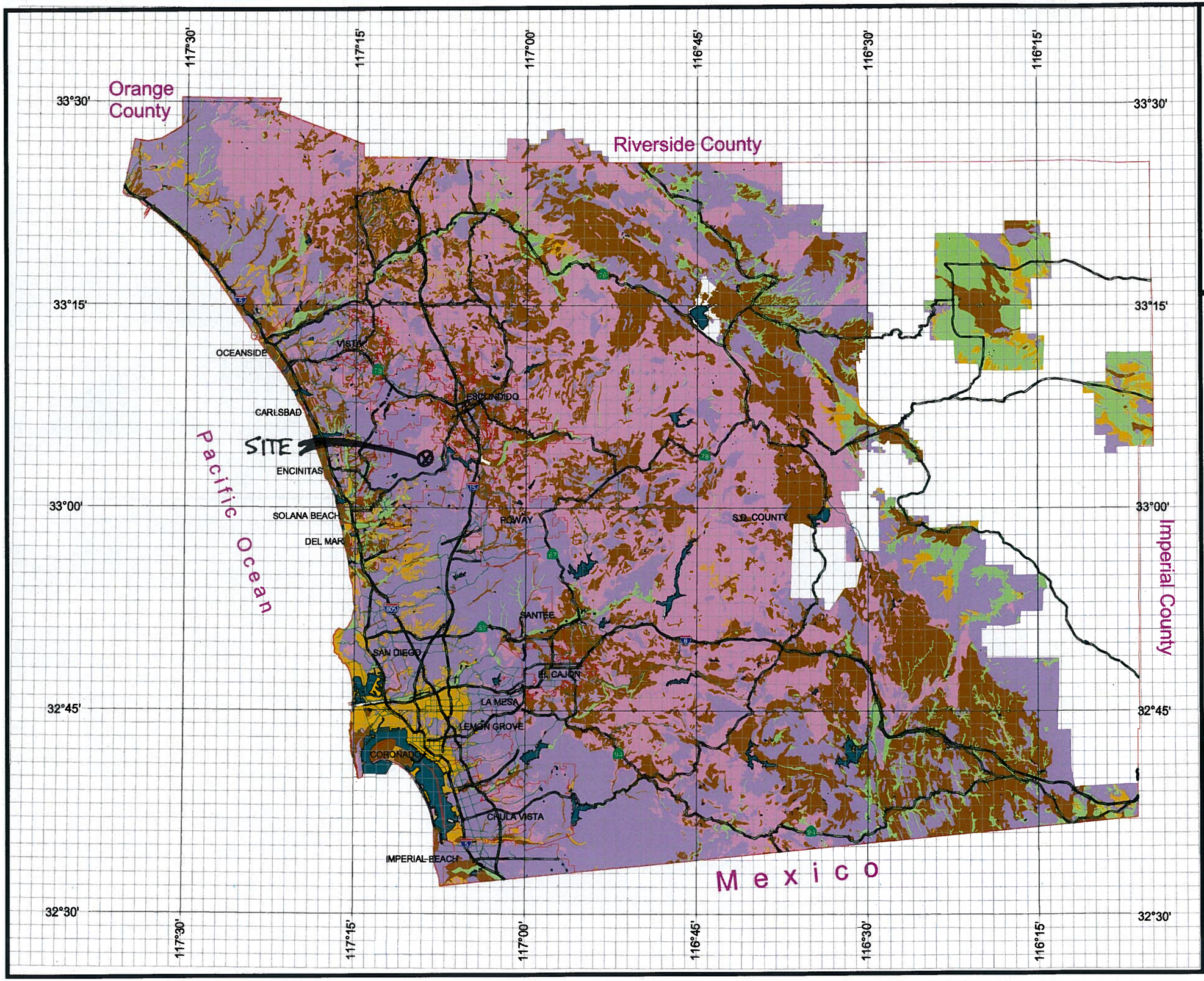

Legend

Soil Groups

- Group A
- Group B
- Group C
- Group D
- Undetermined
- Data Unavailable

DPW GIS
Department of Public Works
Geographic Information Services

SanGIS
We Have San Diego Covered!

THIS MAP IS PROVIDED WITHOUT WARRANTY OF ANY KIND, EITHER EXPRESS OR IMPLIED, INCLUDING, BUT NOT LIMITED TO, THE IMPLIED WARRANTIES OF MERCHANTABILITY AND FITNESS FOR A PARTICULAR PURPOSE.
Copyright SanGIS. All Rights Reserved.

This products may contain information from the SANDAG Regional Information System which cannot be reproduced without the written permission of SANDAG.

This product may contain information which has been reproduced with permission granted by Thomas Brothers Maps.

N W E S

3 0 3 Miles

County of San Diego Hydrology Manual

Rainfall Isopluvials

100 Year Rainfall Event - 6 Hours

Isopluvial (inches)

Orange County

Riverside County

Imperial County

Pacific Ocean

Mexico

SITE

OCEANSIDE
VISTA
CARLSBAD
ESCONDIDO
ENCINITAS
SOLANA BEACH
DEL MAR
POWAY
SANTEE
SAN DIEGO
EL CAJON
LA MESA
LEMON GROVE
CORONADO
CHULA VISTA
IMPERIAL BEACH
S.D. COUNTY

117°30' 117°15' 117°00' 116°45' 116°30' 116°15'
33°30' 33°15' 33°00' 32°45' 32°30'

DPW GIS
Department of Public Works
Geographic Information Services

SanGIS
We Have San Diego Covered!

N
W E
S

3 0 3 Miles

THIS MAP IS PROVIDED WITHOUT WARRANTY OF ANY KIND, EITHER EXPRESS OR IMPLIED, INCLUDING, BUT NOT LIMITED TO, THE IMPLIED WARRANTIES OF MERCHANTABILITY AND FITNESS FOR A PARTICULAR PURPOSE.
Copyright SanGIS. All Rights Reserved.

This products may contain information from the SANDAG Regional Information System which cannot be reproduced without the written permission of SANDAG.

This product may contain information which has been reproduced with permission granted by Thomas Brothers Maps.

County of San Diego Hydrology Manual

Rainfall Isopluvials

100 Year Rainfall Event - 24 Hours

Isopluvial (inches)

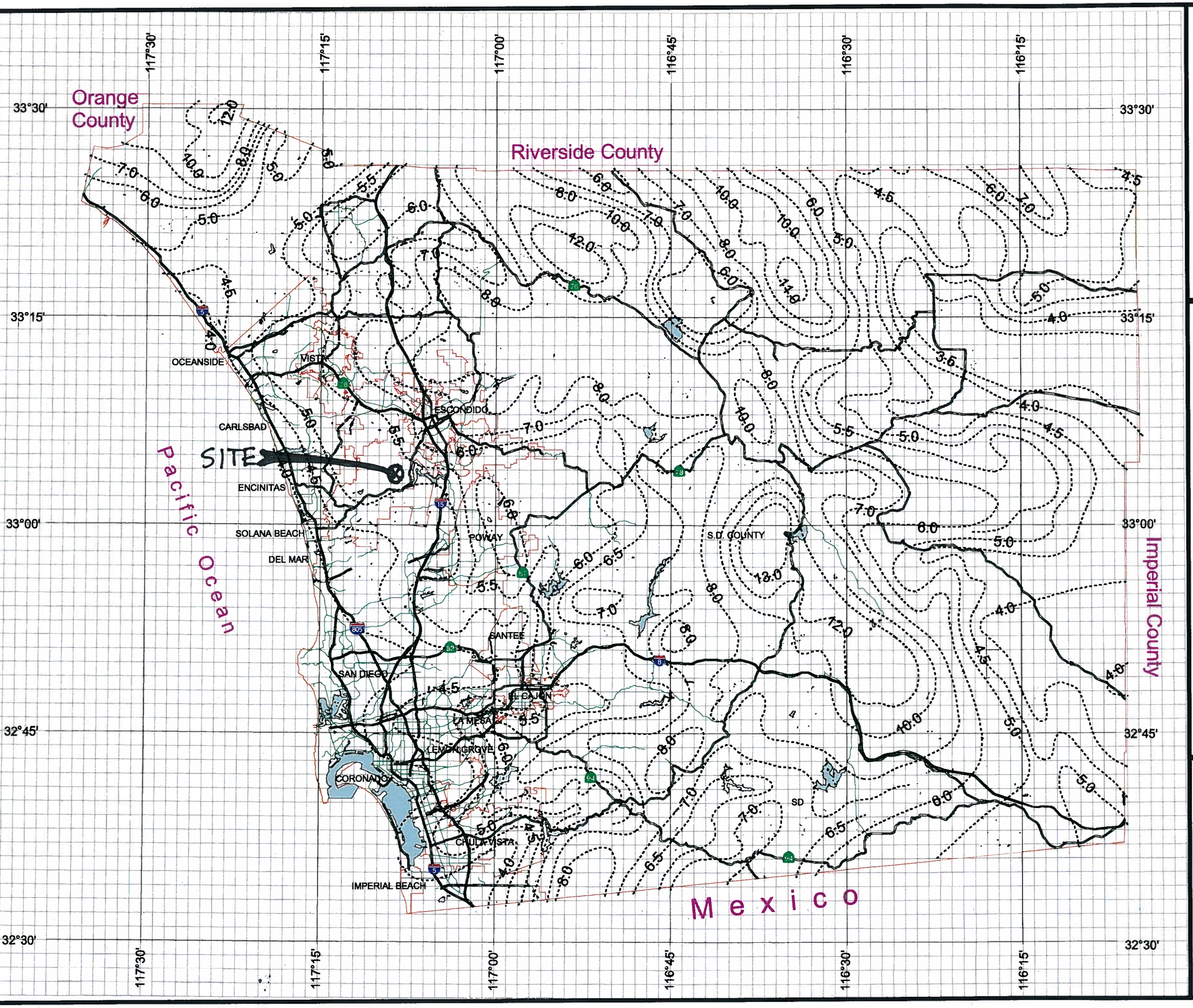

DPW GIS
Department of Public Works
Geographic Information Services

SanGIS
We Have San Diego Covered!

THIS MAP IS PROVIDED WITHOUT WARRANTY OF ANY KIND, EITHER EXPRESS OR IMPLIED, INCLUDING, BUT NOT LIMITED TO, THE IMPLIED WARRANTIES OF MERCHANTABILITY AND FITNESS FOR A PARTICULAR PURPOSE.
Copyright SanGIS. All Rights Reserved.

This products may contain information from the SANDAG Regional Information System which cannot be reproduced without the written permission of SANDAG.

This product may contain information which has been reproduced with permission granted by Thomas Brothers Maps.

N W E S

3 0 3 Miles

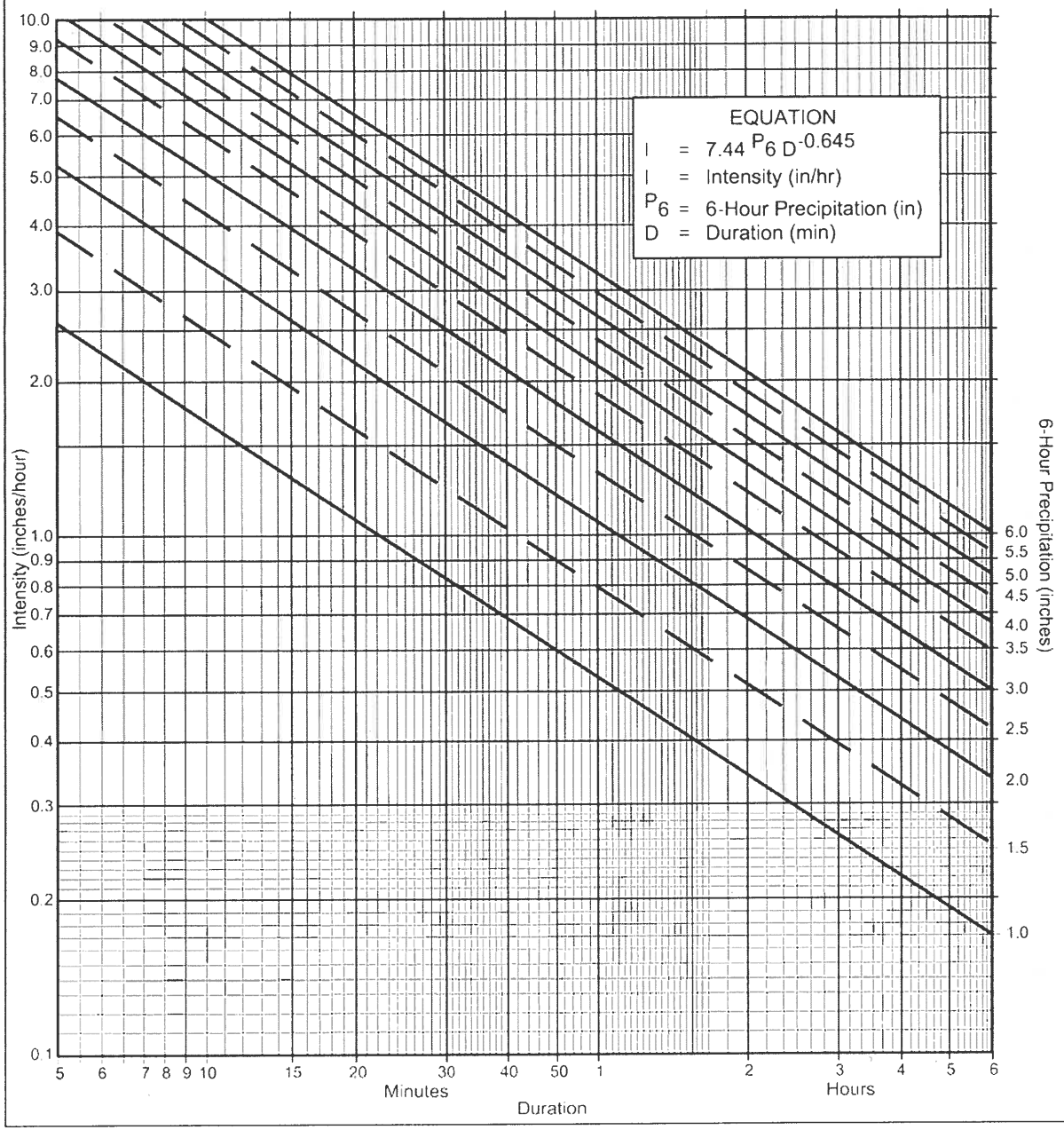

Directions for Application:

(1) From precipitation maps determine 6 hr and 24 hr amounts for the selected frequency. These maps are included in the County Hydrology Manual (10, 50, and 100 yr maps included in the Design and Procedure Manual).

(2) Adjust 6 hr precipitation (if necessary) so that it is within the range of 45% to 65% of the 24 hr precipitation (not applicaple to Desert).

(3) Plot 6 hr precipitation on the right side of the chart.

(4) Draw a line through the point parallel to the plotted lines.

(5) This line is the intensity-duration curve for the location being analyzed.

Application Form:

(a) Selected frequency 100 year

(b) P_6 = 3.1 in., P_{24} = 5.3, $\frac{P_6}{P_{24}}$ = 58 %(2)

(c) Adjusted P_6(2) = 3.1 in.

(d) t_x = _____ min.

(e) I = _____ in./hr.

Note: This chart replaces the Intensity-Duration-Frequency curves used since 1965.

P6	1	1.5	2	2.5	3	3.5	4	4.5	5	5.5	6
Duration	I	I	I	I	I	I	I	I	I	I	I
5	2.63	3.95	5.27	6.59	7.90	9.22	10.54	11.86	13.17	14.49	15.81
7	2.12	3.18	4.24	5.30	6.36	7.42	8.48	9.54	10.60	11.66	12.72
10	1.68	2.53	3.37	4.21	5.05	5.90	6.74	7.58	8.42	9.27	10.11
15	1.30	1.95	2.59	3.24	3.89	4.54	5.19	5.84	6.49	7.13	7.78
20	1.08	1.62	2.15	2.69	3.23	3.77	4.31	4.85	5.39	5.93	6.46
25	0.93	1.40	1.87	2.33	2.80	3.27	3.73	4.20	4.67	5.13	5.60
30	0.83	1.24	1.66	2.07	2.49	2.90	3.32	3.73	4.15	4.56	4.98
40	0.69	1.03	1.38	1.72	2.07	2.41	2.76	3.10	3.45	3.79	4.13
50	0.60	0.90	1.19	1.49	1.79	2.09	2.39	2.69	2.98	3.28	3.58
60	0.53	0.80	1.06	1.33	1.59	1.86	2.12	2.39	2.65	2.92	3.18
90	0.41	0.61	0.82	1.02	1.23	1.43	1.63	1.84	2.04	2.25	2.45
120	0.34	0.51	0.68	0.85	1.02	1.19	1.36	1.53	1.70	1.87	2.04
150	0.29	0.44	0.59	0.73	0.88	1.03	1.18	1.32	1.47	1.62	1.76
180	0.26	0.39	0.52	0.65	0.78	0.91	1.04	1.18	1.31	1.44	1.57
240	0.22	0.33	0.43	0.54	0.65	0.76	0.87	0.98	1.08	1.19	1.30
300	0.19	0.28	0.38	0.47	0.56	0.66	0.75	0.85	0.94	1.03	1.13
360	0.17	0.25	0.33	0.42	0.50	0.58	0.67	0.75	0.84	0.92	1.00

Intensity-Duration Design Chart - Template

FIGURE 3-1

APPENDIX 2

Hydrology Calculations

100-Year Storm

Existing Conditions

FUSCOE ENGINEERING
6390 Greenwich Drive, Suite 170
San Diego, California 92122
tel 858.554.1500 ◦ fax 858.597.0335
www.fuscoe.com

Job Name:
Rancho Cielo Parcel H

Job #:
02711-001-01

Date:
2/28/2011

AES File Name:
RCEX#

Node to Node		AES Code	Elev 1 (feet) (Upstream)	Elev 2 (feet) (Downstream)	Basin Length (feet)	Land Use Code	Runoff / Friction Coeff.	Basin Area (ac.)	Description or Comments
Basin 1									
101	102	2	1,166.6	1,154.0	100.0	58	0.35	0.06	
102	103	5	1,154.0	1,092.0	240.0				
102	103	8				58	0.35	1.03	
103	104	5	1,092.0	971.0	539.0				
103	104	8				58	0.35	6.83	
Basin 2									
201	202	2	1,166.6	1,157.0	100.0	58	0.35	0.09	
202	205	5	1,157.0	1,072.0	393.0				
202	205	8				58	0.35	2.85	
205	205	1							1 OF 2
203	204	2	1,126.0	1,123.0	95.0	4	0.51	0.14	
204	205	6	1,123.0	1,072.0	732.0	4	0.51	1.2	
205	205	1							2 OF 2
Basin 3									
301	302	2	1,160.5	1,159.2	95.0	7	0.9	0.04	
302	303	6	1,159.2	1,126.0	674.0	7	0.6	0.67	
Basin 4									
401	402	2	1,146.0	1,135.0	100.0	58	0.35	0.07	
402	403	5	1,135.0	1,079.0	285.0				
402	403	8				58	0.35	0.78	
Basin 5									
501	502	2	1,140.0	1,125.0	100.0	58	0.35	0.08	
502	503	5	1,125.0	1,084.0	199.0				
502	503	8				58	0.35	0.93	

```
**************************************************************************

          RATIONAL METHOD HYDROLOGY COMPUTER PROGRAM PACKAGE
          Reference: SAN DIEGO COUNTY FLOOD CONTROL DISTRICT
                       2003,1985,1981 HYDROLOGY MANUAL
        (c) Copyright 1982-2007 Advanced Engineering Software (aes)
            Ver. 3.0 Release Date: 06/01/2007  License ID 1355

                          Analysis prepared by:

                     FUSCOE ENGINEERING - SAN DIEGO, INC.
                       6390 GREENWICH DRIVE, SUITE 170
                         SAN DIEGO, CALIFORNIA 92122
                               (858) 554-1500

 ************************** DESCRIPTION OF STUDY **************************
* RANCHO CIELO PARCEL H                                                  *
* 100-YEAR HYDROLOGY EXISTING CONDITIONS BASIN 1                         *
* 02-22-11  02711-001-01                                                 *
 **************************************************************************

  FILE NAME: RCEX1.DAT
  TIME/DATE OF STUDY: 11:38 02/23/2011
--------------------------------------------------------------------------
  USER SPECIFIED HYDROLOGY AND HYDRAULIC MODEL INFORMATION:
--------------------------------------------------------------------------
  2003 SAN DIEGO MANUAL CRITERIA

  USER SPECIFIED STORM EVENT(YEAR) = 100.00
  6-HOUR DURATION PRECIPITATION (INCHES) =   3.100
  SPECIFIED MINIMUM PIPE SIZE(INCH) =  18.00
  SPECIFIED PERCENT OF GRADIENTS(DECIMAL) TO USE FOR FRICTION SLOPE = 0.95
  SAN DIEGO HYDROLOGY MANUAL "C"-VALUES USED FOR RATIONAL METHOD
  NOTE: USE MODIFIED RATIONAL METHOD PROCEDURES FOR CONFLUENCE ANALYSIS
  *USER-DEFINED STREET-SECTIONS FOR COUPLED PIPEFLOW AND STREETFLOW MODEL*
     HALF-  CROWN TO   STREET-CROSSFALL:   CURB  GUTTER-GEOMETRIES:  MANNING
     WIDTH  CROSSFALL  IN-  / OUT-/PARK-  HEIGHT  WIDTH  LIP   HIKE  FACTOR
NO.   (FT)     (FT)    SIDE / SIDE/ WAY    (FT)    (FT)  (FT)  (FT)    (n)
===  =====  =========  =================  ======  ===== ====== ===== =======
  1   30.0     20.0    0.018/0.018/0.020   0.67    2.00 0.0313 0.167 0.0150

  GLOBAL STREET FLOW-DEPTH CONSTRAINTS:
    1. Relative Flow-Depth =  0.00 FEET
       as (Maximum Allowable Street Flow Depth) - (Top-of-Curb)
    2. (Depth)*(Velocity) Constraint =  6.0 (FT*FT/S)
  *SIZE PIPE WITH A FLOW CAPACITY GREATER THAN
   OR EQUAL TO THE UPSTREAM TRIBUTARY PIPE.*

**************************************************************************
  FLOW PROCESS FROM NODE    101.00 TO NODE    102.00 IS CODE =  21
--------------------------------------------------------------------------
  >>>>>RATIONAL METHOD INITIAL SUBAREA ANALYSIS<<<<<
==========================================================================
  *USER SPECIFIED(SUBAREA):
  OPEN BRUSH FAIR COVER RUNOFF COEFFICIENT = .3500
  S.C.S. CURVE NUMBER (AMC II) =   0
  INITIAL SUBAREA FLOW-LENGTH(FEET) =   100.00
  UPSTREAM ELEVATION(FEET) =   1166.60
  DOWNSTREAM ELEVATION(FEET) =   1154.00
  ELEVATION DIFFERENCE(FEET) =     12.60
  SUBAREA OVERLAND TIME OF FLOW(MIN.) =    6.267
  WARNING: THE MAXIMUM OVERLAND FLOW SLOPE, 10.%, IS USED IN Tc CALCULATION!
   100 YEAR RAINFALL INTENSITY(INCH/HOUR) =  7.061
  SUBAREA RUNOFF(CFS) =      0.15
  TOTAL AREA(ACRES) =      0.06   TOTAL RUNOFF(CFS) =      0.15

**************************************************************************
  FLOW PROCESS FROM NODE    102.00 TO NODE    103.00 IS CODE =  53
--------------------------------------------------------------------------
  >>>>>COMPUTE NATURAL MOUNTAIN CHANNEL FLOW<<<<<
  >>>>>TRAVELTIME THRU SUBAREA<<<<<
==========================================================================
  ELEVATION DATA: UPSTREAM(FEET) =   1154.00  DOWNSTREAM(FEET) =   1092.00
  CHANNEL LENGTH THRU SUBAREA(FEET) =   240.00   CHANNEL SLOPE =  0.2583
  SLOPE ADJUSTMENT CURVE USED:
  EFFECTIVE SLOPE = .1828 (PER LACFCD/RCFC&WCD HYDROLOGY MANUAL)
  NOTE: CHANNEL FLOW OF 1. CFS WAS ASSUMED IN VELOCITY ESTIMATION
  CHANNEL FLOW THRU SUBAREA(CFS) =       0.15
```

```
  FLOW VELOCITY(FEET/SEC) =   2.39 (PER LACFCD/RCFC&WCD HYDROLOGY MANUAL)
  TRAVEL TIME(MIN.) =   1.67   Tc(MIN.) =    7.94
  LONGEST FLOWPATH FROM NODE    101.00 TO NODE    103.00 =     340.00 FEET.

****************************************************************************
  FLOW PROCESS FROM NODE    102.00 TO NODE    103.00 IS CODE =  81
----------------------------------------------------------------------------
  >>>>>ADDITION OF SUBAREA TO MAINLINE PEAK FLOW<<<<<
============================================================================
   100 YEAR RAINFALL INTENSITY(INCH/HOUR) =  6.062
  *USER SPECIFIED(SUBAREA):
  OPEN BRUSH FAIR COVER RUNOFF COEFFICIENT = .3500
  S.C.S. CURVE NUMBER (AMC II) =   0
  AREA-AVERAGE RUNOFF COEFFICIENT = 0.3500
  SUBAREA AREA(ACRES) =    1.03   SUBAREA RUNOFF(CFS) =    2.19
  TOTAL AREA(ACRES) =        1.1   TOTAL RUNOFF(CFS) =       2.31
  TC(MIN.) =    7.94

****************************************************************************
  FLOW PROCESS FROM NODE    103.00 TO NODE    104.00 IS CODE =  53
----------------------------------------------------------------------------
  >>>>>COMPUTE NATURAL MOUNTAIN CHANNEL FLOW<<<<<
  >>>>>TRAVELTIME THRU SUBAREA<<<<<
============================================================================
  ELEVATION DATA: UPSTREAM(FEET) =   1092.00  DOWNSTREAM(FEET) =    971.00
  CHANNEL LENGTH THRU SUBAREA(FEET) =   539.00   CHANNEL SLOPE =  0.2245
  SLOPE ADJUSTMENT CURVE USED:
  EFFECTIVE SLOPE = .1715 (PER LACFCD/RCFC&WCD HYDROLOGY MANUAL)
  CHANNEL FLOW THRU SUBAREA(CFS) =       2.31
  FLOW VELOCITY(FEET/SEC) =   3.07 (PER LACFCD/RCFC&WCD HYDROLOGY MANUAL)
  TRAVEL TIME(MIN.) =   2.93   Tc(MIN.) =   10.87
  LONGEST FLOWPATH FROM NODE    101.00 TO NODE    104.00 =     879.00 FEET.

****************************************************************************
  FLOW PROCESS FROM NODE    103.00 TO NODE    104.00 IS CODE =  81
----------------------------------------------------------------------------
  >>>>>ADDITION OF SUBAREA TO MAINLINE PEAK FLOW<<<<<
============================================================================
   100 YEAR RAINFALL INTENSITY(INCH/HOUR) =  4.950
  *USER SPECIFIED(SUBAREA):
  OPEN BRUSH FAIR COVER RUNOFF COEFFICIENT = .3500
  S.C.S. CURVE NUMBER (AMC II) =   0
  AREA-AVERAGE RUNOFF COEFFICIENT = 0.3500
  SUBAREA AREA(ACRES) =    6.83   SUBAREA RUNOFF(CFS) =   11.83
  TOTAL AREA(ACRES) =        7.9   TOTAL RUNOFF(CFS) =      13.72
  TC(MIN.) =   10.87
============================================================================
  END OF STUDY SUMMARY:
  TOTAL AREA(ACRES)     =        7.9  TC(MIN.) =     10.87
  PEAK FLOW RATE(CFS)   =      13.72
============================================================================
============================================================================
  END OF RATIONAL METHOD ANALYSIS
```

```
**************************************************************************

          RATIONAL METHOD HYDROLOGY COMPUTER PROGRAM PACKAGE
          Reference: SAN DIEGO COUNTY FLOOD CONTROL DISTRICT
                       2003,1985,1981 HYDROLOGY MANUAL
        (c) Copyright 1982-2007 Advanced Engineering Software (aes)
            Ver. 3.0 Release Date: 06/01/2007  License ID 1355

                          Analysis prepared by:

                     FUSCOE ENGINEERING - SAN DIEGO, INC.
                       6390 GREENWICH DRIVE, SUITE 170
                         SAN DIEGO, CALIFORNIA 92122
                               (858) 554-1500

 ************************** DESCRIPTION OF STUDY **************************
* RANCHO CIELO PARCEL H                                                  *
* 100-YEAR HYDROLOGY EXISTING CONDITIONS BASIN 2                         *
* 02-22-11  02711-001-01                                                 *
 **************************************************************************

  FILE NAME: RCEX2.DAT
  TIME/DATE OF STUDY: 11:06 02/22/2011
--------------------------------------------------------------------------
  USER SPECIFIED HYDROLOGY AND HYDRAULIC MODEL INFORMATION:
--------------------------------------------------------------------------
  2003 SAN DIEGO MANUAL CRITERIA

  USER SPECIFIED STORM EVENT(YEAR) = 100.00
  6-HOUR DURATION PRECIPITATION (INCHES) =   3.100
  SPECIFIED MINIMUM PIPE SIZE(INCH) =  18.00
  SPECIFIED PERCENT OF GRADIENTS(DECIMAL) TO USE FOR FRICTION SLOPE = 0.95
  SAN DIEGO HYDROLOGY MANUAL "C"-VALUES USED FOR RATIONAL METHOD
  NOTE: USE MODIFIED RATIONAL METHOD PROCEDURES FOR CONFLUENCE ANALYSIS
  *USER-DEFINED STREET-SECTIONS FOR COUPLED PIPEFLOW AND STREETFLOW MODEL*
     HALF-  CROWN TO   STREET-CROSSFALL:   CURB  GUTTER-GEOMETRIES:  MANNING
     WIDTH  CROSSFALL  IN-  / OUT-/PARK-  HEIGHT  WIDTH  LIP   HIKE  FACTOR
NO.   (FT)     (FT)    SIDE / SIDE/ WAY    (FT)    (FT)  (FT)  (FT)    (n)
===  =====  =========  =================  ======  ===== ====== ===== =======
  1   30.0     20.0    0.018/0.018/0.020   0.67    2.00 0.0313 0.167 0.0150

  GLOBAL STREET FLOW-DEPTH CONSTRAINTS:
    1. Relative Flow-Depth =  0.00 FEET
       as (Maximum Allowable Street Flow Depth) - (Top-of-Curb)
    2. (Depth)*(Velocity) Constraint =  6.0 (FT*FT/S)
  *SIZE PIPE WITH A FLOW CAPACITY GREATER THAN
   OR EQUAL TO THE UPSTREAM TRIBUTARY PIPE.*

**************************************************************************
  FLOW PROCESS FROM NODE    201.00 TO NODE    202.00 IS CODE =  21
--------------------------------------------------------------------------
  >>>>>RATIONAL METHOD INITIAL SUBAREA ANALYSIS<<<<<
==========================================================================
  *USER SPECIFIED(SUBAREA):
  OPEN BRUSH FAIR COVER RUNOFF COEFFICIENT = .3500
  S.C.S. CURVE NUMBER (AMC II) =   0
  INITIAL SUBAREA FLOW-LENGTH(FEET) =   100.00
  UPSTREAM ELEVATION(FEET) =   1166.60
  DOWNSTREAM ELEVATION(FEET) =   1157.00
  ELEVATION DIFFERENCE(FEET) =      9.60
  SUBAREA OVERLAND TIME OF FLOW(MIN.) =    6.352
   100 YEAR RAINFALL INTENSITY(INCH/HOUR) =  6.999
  SUBAREA RUNOFF(CFS) =      0.22
  TOTAL AREA(ACRES) =      0.09   TOTAL RUNOFF(CFS) =      0.22

**************************************************************************
  FLOW PROCESS FROM NODE    202.00 TO NODE    205.00 IS CODE =  53
--------------------------------------------------------------------------
  >>>>>COMPUTE NATURAL MOUNTAIN CHANNEL FLOW<<<<<
  >>>>>TRAVELTIME THRU SUBAREA<<<<<
==========================================================================
  ELEVATION DATA: UPSTREAM(FEET) =   1157.00  DOWNSTREAM(FEET) =   1072.00
  CHANNEL LENGTH THRU SUBAREA(FEET) =   393.00   CHANNEL SLOPE =  0.2163
  SLOPE ADJUSTMENT CURVE USED:
  EFFECTIVE SLOPE = .1681 (PER LACFCD/RCFC&WCD HYDROLOGY MANUAL)
  NOTE: CHANNEL FLOW OF 1. CFS WAS ASSUMED IN VELOCITY ESTIMATION
  CHANNEL FLOW THRU SUBAREA(CFS) =      0.22
  FLOW VELOCITY(FEET/SEC) =   2.30 (PER LACFCD/RCFC&WCD HYDROLOGY MANUAL)
```

```
  TRAVEL TIME(MIN.) =   2.85   Tc(MIN.) =    9.20
  LONGEST FLOWPATH FROM NODE    201.00 TO NODE    205.00 =     493.00 FEET.

****************************************************************************
  FLOW PROCESS FROM NODE    202.00 TO NODE    205.00 IS CODE =  81
----------------------------------------------------------------------------
  >>>>>ADDITION OF SUBAREA TO MAINLINE PEAK FLOW<<<<<
============================================================================
   100 YEAR RAINFALL INTENSITY(INCH/HOUR) =  5.510
  *USER SPECIFIED(SUBAREA):
  OPEN BRUSH FAIR COVER RUNOFF COEFFICIENT = .3500
  S.C.S. CURVE NUMBER (AMC II) =   0
  AREA-AVERAGE RUNOFF COEFFICIENT = 0.3500
  SUBAREA AREA(ACRES) =    2.85   SUBAREA RUNOFF(CFS) =    5.50
  TOTAL AREA(ACRES) =        2.9   TOTAL RUNOFF(CFS) =       5.67
  TC(MIN.) =    9.20

****************************************************************************
  FLOW PROCESS FROM NODE    205.00 TO NODE    205.00 IS CODE =   1
----------------------------------------------------------------------------
  >>>>>DESIGNATE INDEPENDENT STREAM FOR CONFLUENCE<<<<<
============================================================================
  TOTAL NUMBER OF STREAMS =  2
  CONFLUENCE VALUES USED FOR INDEPENDENT STREAM  1 ARE:
  TIME OF CONCENTRATION(MIN.) =    9.20
  RAINFALL INTENSITY(INCH/HR) =   5.51
  TOTAL STREAM AREA(ACRES) =     2.94
  PEAK FLOW RATE(CFS) AT CONFLUENCE =      5.67

****************************************************************************
  FLOW PROCESS FROM NODE    203.00 TO NODE    204.00 IS CODE =  21
----------------------------------------------------------------------------
  >>>>>RATIONAL METHOD INITIAL SUBAREA ANALYSIS<<<<<
============================================================================
  *USER SPECIFIED(SUBAREA):
  RESIDENTAIL (4.3 DU/AC OR LESS) RUNOFF COEFFICIENT = .5100
  S.C.S. CURVE NUMBER (AMC II) =   0
  INITIAL SUBAREA FLOW-LENGTH(FEET) =    95.00
  UPSTREAM ELEVATION(FEET) =   1126.00
  DOWNSTREAM ELEVATION(FEET) =   1123.00
  ELEVATION DIFFERENCE(FEET) =      3.00
  SUBAREA OVERLAND TIME OF FLOW(MIN.) =    7.056
   100 YEAR RAINFALL INTENSITY(INCH/HOUR) =  6.541
  SUBAREA RUNOFF(CFS) =      0.47
  TOTAL AREA(ACRES) =      0.14   TOTAL RUNOFF(CFS) =      0.47

****************************************************************************
  FLOW PROCESS FROM NODE    204.00 TO NODE    205.00 IS CODE =  62
----------------------------------------------------------------------------
  >>>>>COMPUTE STREET FLOW TRAVEL TIME THRU SUBAREA<<<<<
  >>>>>(STREET TABLE SECTION #  1 USED)<<<<<
============================================================================
  UPSTREAM ELEVATION(FEET) = 1123.00  DOWNSTREAM ELEVATION(FEET) = 1072.00
  STREET LENGTH(FEET) =   732.00   CURB HEIGHT(INCHES) =  8.0
  STREET HALFWIDTH(FEET) = 30.00

  DISTANCE FROM CROWN TO CROSSFALL GRADEBREAK(FEET) =  20.00
  INSIDE STREET CROSSFALL(DECIMAL) =  0.018
  OUTSIDE STREET CROSSFALL(DECIMAL)  =  0.018

  SPECIFIED NUMBER OF HALFSTREETS CARRYING RUNOFF =  1
  STREET PARKWAY CROSSFALL(DECIMAL)  =  0.020
  Manning's FRICTION FACTOR for Streetflow Section(curb-to-curb) =   0.0150
  Manning's FRICTION FACTOR for Back-of-Walk Flow Section =   0.0200

    **TRAVEL TIME COMPUTED USING ESTIMATED FLOW(CFS) =       2.11
    STREETFLOW MODEL RESULTS USING ESTIMATED FLOW:
    STREET FLOW DEPTH(FEET) =  0.26
    HALFSTREET FLOOD WIDTH(FEET) =    5.22
    AVERAGE FLOW VELOCITY(FEET/SEC.) =    4.84
    PRODUCT OF DEPTH&VELOCITY(FT*FT/SEC.) =    1.24
  STREET FLOW TRAVEL TIME(MIN.) =   2.52   Tc(MIN.) =    9.58
   100 YEAR RAINFALL INTENSITY(INCH/HOUR) =  5.370
  *USER SPECIFIED(SUBAREA):
  RESIDENTAIL (4.3 DU/AC OR LESS) RUNOFF COEFFICIENT = .5100
  S.C.S. CURVE NUMBER (AMC II) =   0
  AREA-AVERAGE RUNOFF COEFFICIENT =  0.510
  SUBAREA AREA(ACRES) =    1.20      SUBAREA RUNOFF(CFS) =    3.29
  TOTAL AREA(ACRES) =        1.3         PEAK FLOW RATE(CFS) =       3.67
```

```
  END OF SUBAREA STREET FLOW HYDRAULICS:
  DEPTH(FEET) = 0.30   HALFSTREET FLOOD WIDTH(FEET) =   7.53
  FLOW VELOCITY(FEET/SEC.) =  5.24   DEPTH*VELOCITY(FT*FT/SEC.) =   1.56
  LONGEST FLOWPATH FROM NODE    203.00 TO NODE    205.00 =     827.00 FEET.

****************************************************************************
  FLOW PROCESS FROM NODE    205.00 TO NODE    205.00 IS CODE =   1
----------------------------------------------------------------------------
  >>>>>DESIGNATE INDEPENDENT STREAM FOR CONFLUENCE<<<<<
  >>>>>AND COMPUTE VARIOUS CONFLUENCED STREAM VALUES<<<<<
============================================================================
  TOTAL NUMBER OF STREAMS =  2
  CONFLUENCE VALUES USED FOR INDEPENDENT STREAM  2 ARE:
  TIME OF CONCENTRATION(MIN.) =    9.58
  RAINFALL INTENSITY(INCH/HR) =   5.37
  TOTAL STREAM AREA(ACRES) =     1.34
  PEAK FLOW RATE(CFS) AT CONFLUENCE =      3.67

  ** CONFLUENCE DATA **
  STREAM     RUNOFF       Tc      INTENSITY      AREA
  NUMBER      (CFS)     (MIN.)   (INCH/HOUR)    (ACRE)
      1        5.67     9.20        5.510          2.94
      2        3.67     9.58        5.370          1.34

  RAINFALL INTENSITY AND TIME OF CONCENTRATION RATIO
  CONFLUENCE FORMULA USED FOR  2 STREAMS.

  ** PEAK FLOW RATE TABLE **
  STREAM     RUNOFF      Tc      INTENSITY
  NUMBER      (CFS)    (MIN.)   (INCH/HOUR)
      1        9.20     9.20       5.510
      2        9.20     9.58       5.370

  COMPUTED CONFLUENCE ESTIMATES ARE AS FOLLOWS:
  PEAK FLOW RATE(CFS) =       9.20   Tc(MIN.) =    9.20
  TOTAL AREA(ACRES) =        4.3
  LONGEST FLOWPATH FROM NODE    203.00 TO NODE    205.00 =     827.00 FEET.
============================================================================
  END OF STUDY SUMMARY:
  TOTAL AREA(ACRES)     =        4.3  TC(MIN.) =      9.20
  PEAK FLOW RATE(CFS)   =       9.20
============================================================================
============================================================================
  END OF RATIONAL METHOD ANALYSIS
```

```
**************************************************************************

            RATIONAL METHOD HYDROLOGY COMPUTER PROGRAM PACKAGE
            Reference: SAN DIEGO COUNTY FLOOD CONTROL DISTRICT
                         2003,1985,1981 HYDROLOGY MANUAL
          (c) Copyright 1982-2007 Advanced Engineering Software (aes)
              Ver. 3.0 Release Date: 06/01/2007  License ID 1355

                            Analysis prepared by:

                       FUSCOE ENGINEERING - SAN DIEGO, INC.
                         6390 GREENWICH DRIVE, SUITE 170
                           SAN DIEGO, CALIFORNIA 92122
                                 (858) 554-1500

 ************************** DESCRIPTION OF STUDY **************************
* RANCHO CIELO PARCEL H                                                  *
* 100-YEAR HYDROLOGY EXISTING CONDITIONS BASIN 3                         *
* 02-24-11  02711-001-01                                                 *
 **************************************************************************

  FILE NAME: RCEX3.DAT
  TIME/DATE OF STUDY: 16:56 02/24/2011
--------------------------------------------------------------------------
  USER SPECIFIED HYDROLOGY AND HYDRAULIC MODEL INFORMATION:
--------------------------------------------------------------------------
  2003 SAN DIEGO MANUAL CRITERIA

  USER SPECIFIED STORM EVENT(YEAR) = 100.00
  6-HOUR DURATION PRECIPITATION (INCHES) =   3.100
  SPECIFIED MINIMUM PIPE SIZE(INCH) =  18.00
  SPECIFIED PERCENT OF GRADIENTS(DECIMAL) TO USE FOR FRICTION SLOPE = 0.95
  SAN DIEGO HYDROLOGY MANUAL "C"-VALUES USED FOR RATIONAL METHOD
  NOTE: USE MODIFIED RATIONAL METHOD PROCEDURES FOR CONFLUENCE ANALYSIS
  *USER-DEFINED STREET-SECTIONS FOR COUPLED PIPEFLOW AND STREETFLOW MODEL*
     HALF-  CROWN TO   STREET-CROSSFALL:   CURB  GUTTER-GEOMETRIES:  MANNING
     WIDTH  CROSSFALL  IN-  / OUT-/PARK-  HEIGHT  WIDTH  LIP   HIKE  FACTOR
NO.   (FT)     (FT)    SIDE / SIDE/ WAY    (FT)    (FT)  (FT)  (FT)    (n)
===  =====  =========  =================  ======  ===== ====== ===== =======
  1   30.0     20.0    0.018/0.018/0.020   0.67    2.00 0.0313 0.167 0.0150

  GLOBAL STREET FLOW-DEPTH CONSTRAINTS:
    1. Relative Flow-Depth =  0.00 FEET
       as (Maximum Allowable Street Flow Depth) - (Top-of-Curb)
    2. (Depth)*(Velocity) Constraint =  6.0 (FT*FT/S)
  *SIZE PIPE WITH A FLOW CAPACITY GREATER THAN
   OR EQUAL TO THE UPSTREAM TRIBUTARY PIPE.*

**************************************************************************
  FLOW PROCESS FROM NODE    301.00 TO NODE    302.00 IS CODE =  21
--------------------------------------------------------------------------
  >>>>>RATIONAL METHOD INITIAL SUBAREA ANALYSIS<<<<<
==========================================================================
  *USER SPECIFIED(SUBAREA):
  RESIDENTAIL (14.5 DU/AC OR LESS) RUNOFF COEFFICIENT = .9000
  S.C.S. CURVE NUMBER (AMC II) =   0
  INITIAL SUBAREA FLOW-LENGTH(FEET) =    95.00
  UPSTREAM ELEVATION(FEET) =   1160.50
  DOWNSTREAM ELEVATION(FEET) =   1159.20
  ELEVATION DIFFERENCE(FEET) =      1.30
  SUBAREA OVERLAND TIME OF FLOW(MIN.) =    2.723
  WARNING: INITIAL SUBAREA FLOW PATH LENGTH IS GREATER THAN
           THE MAXIMUM OVERLAND FLOW LENGTH =    70.53
           (Reference: Table 3-1B of Hydrology Manual)
           THE MAXIMUM OVERLAND FLOW LENGTH IS USED IN Tc CALCULATION!
   100 YEAR RAINFALL INTENSITY(INCH/HOUR) =  8.168
  NOTE: RAINFALL INTENSITY IS BASED ON Tc = 5-MINUTE.
  SUBAREA RUNOFF(CFS) =      0.29
  TOTAL AREA(ACRES) =      0.04   TOTAL RUNOFF(CFS) =      0.29

**************************************************************************
  FLOW PROCESS FROM NODE    302.00 TO NODE    303.00 IS CODE =  62
--------------------------------------------------------------------------
  >>>>>COMPUTE STREET FLOW TRAVEL TIME THRU SUBAREA<<<<<
  >>>>>(STREET TABLE SECTION #  1 USED)<<<<<
==========================================================================
  UPSTREAM ELEVATION(FEET) = 1159.20  DOWNSTREAM ELEVATION(FEET) = 1126.00
  STREET LENGTH(FEET) =   674.00   CURB HEIGHT(INCHES) =  8.0
```

```
  STREET HALFWIDTH(FEET) = 30.00

  DISTANCE FROM CROWN TO CROSSFALL GRADEBREAK(FEET) =  20.00
  INSIDE STREET CROSSFALL(DECIMAL) =  0.018
  OUTSIDE STREET CROSSFALL(DECIMAL)  =  0.018

  SPECIFIED NUMBER OF HALFSTREETS CARRYING RUNOFF =  1
  STREET PARKWAY CROSSFALL(DECIMAL)  =  0.020
  Manning's FRICTION FACTOR for Streetflow Section(curb-to-curb) =   0.0150
  Manning's FRICTION FACTOR for Back-of-Walk Flow Section =   0.0200

    **TRAVEL TIME COMPUTED USING ESTIMATED FLOW(CFS) =       1.87
    STREETFLOW MODEL RESULTS USING ESTIMATED FLOW:
    STREET FLOW DEPTH(FEET) =  0.26
    HALFSTREET FLOOD WIDTH(FEET) =    5.47
    AVERAGE FLOW VELOCITY(FEET/SEC.) =    4.05
    PRODUCT OF DEPTH&VELOCITY(FT*FT/SEC.) =    1.05
  STREET FLOW TRAVEL TIME(MIN.) =   2.77   Tc(MIN.) =    5.50
   100 YEAR RAINFALL INTENSITY(INCH/HOUR) =  7.684
  *USER SPECIFIED(SUBAREA):
  RESIDENTAIL (14.5 DU/AC OR LESS) RUNOFF COEFFICIENT = .6000
  S.C.S. CURVE NUMBER (AMC II) =   0
  AREA-AVERAGE RUNOFF COEFFICIENT =  0.617
  SUBAREA AREA(ACRES) =    0.67      SUBAREA RUNOFF(CFS) =    3.09
  TOTAL AREA(ACRES) =        0.7        PEAK FLOW RATE(CFS) =       3.37

  END OF SUBAREA STREET FLOW HYDRAULICS:
  DEPTH(FEET) = 0.30   HALFSTREET FLOOD WIDTH(FEET) =   7.91
  FLOW VELOCITY(FEET/SEC.) =  4.48   DEPTH*VELOCITY(FT*FT/SEC.) =   1.36
  LONGEST FLOWPATH FROM NODE    301.00 TO NODE    303.00 =     769.00 FEET.
============================================================================
  END OF STUDY SUMMARY:
  TOTAL AREA(ACRES)     =        0.7  TC(MIN.) =      5.50
  PEAK FLOW RATE(CFS)   =       3.37
============================================================================
============================================================================
  END OF RATIONAL METHOD ANALYSIS
```

```
**************************************************************************

          RATIONAL METHOD HYDROLOGY COMPUTER PROGRAM PACKAGE
          Reference: SAN DIEGO COUNTY FLOOD CONTROL DISTRICT
                       2003,1985,1981 HYDROLOGY MANUAL
        (c) Copyright 1982-2007 Advanced Engineering Software (aes)
            Ver. 3.0 Release Date: 06/01/2007  License ID 1355

                          Analysis prepared by:

                     FUSCOE ENGINEERING - SAN DIEGO, INC.
                       6390 GREENWICH DRIVE, SUITE 170
                         SAN DIEGO, CALIFORNIA 92122
                               (858) 554-1500

 ************************** DESCRIPTION OF STUDY **************************
* RANCHO CIELO PARCEL H                                                  *
* 100-YEAR HYDROLOGY EXISTING CONDITIONS BASIN 4                         *
* 02-23-11  02711-001-01                                                 *
 **************************************************************************

  FILE NAME: RCEX4.DAT
  TIME/DATE OF STUDY: 11:53 02/23/2011
--------------------------------------------------------------------------
  USER SPECIFIED HYDROLOGY AND HYDRAULIC MODEL INFORMATION:
--------------------------------------------------------------------------
  2003 SAN DIEGO MANUAL CRITERIA

  USER SPECIFIED STORM EVENT(YEAR) = 100.00
  6-HOUR DURATION PRECIPITATION (INCHES) =   3.100
  SPECIFIED MINIMUM PIPE SIZE(INCH) =  18.00
  SPECIFIED PERCENT OF GRADIENTS(DECIMAL) TO USE FOR FRICTION SLOPE = 0.95
  SAN DIEGO HYDROLOGY MANUAL "C"-VALUES USED FOR RATIONAL METHOD
  NOTE: USE MODIFIED RATIONAL METHOD PROCEDURES FOR CONFLUENCE ANALYSIS
  *USER-DEFINED STREET-SECTIONS FOR COUPLED PIPEFLOW AND STREETFLOW MODEL*
     HALF-  CROWN TO   STREET-CROSSFALL:   CURB  GUTTER-GEOMETRIES:  MANNING
     WIDTH  CROSSFALL  IN-  / OUT-/PARK-  HEIGHT  WIDTH  LIP   HIKE  FACTOR
NO.   (FT)     (FT)    SIDE / SIDE/ WAY    (FT)    (FT)  (FT)  (FT)    (n)
===  =====  =========  =================  ======  ===== ====== ===== =======
  1   30.0     20.0    0.018/0.018/0.020   0.67    2.00 0.0313 0.167 0.0150

  GLOBAL STREET FLOW-DEPTH CONSTRAINTS:
    1. Relative Flow-Depth =  0.00 FEET
       as (Maximum Allowable Street Flow Depth) - (Top-of-Curb)
    2. (Depth)*(Velocity) Constraint =  6.0 (FT*FT/S)
  *SIZE PIPE WITH A FLOW CAPACITY GREATER THAN
   OR EQUAL TO THE UPSTREAM TRIBUTARY PIPE.*

**************************************************************************
  FLOW PROCESS FROM NODE    401.00 TO NODE    402.00 IS CODE =  21
--------------------------------------------------------------------------
  >>>>>RATIONAL METHOD INITIAL SUBAREA ANALYSIS<<<<<
==========================================================================
  *USER SPECIFIED(SUBAREA):
  OPEN BRUSH FAIR COVER RUNOFF COEFFICIENT = .3500
  S.C.S. CURVE NUMBER (AMC II) =   0
  INITIAL SUBAREA FLOW-LENGTH(FEET) =   100.00
  UPSTREAM ELEVATION(FEET) =   1146.00
  DOWNSTREAM ELEVATION(FEET) =   1135.00
  ELEVATION DIFFERENCE(FEET) =     11.00
  SUBAREA OVERLAND TIME OF FLOW(MIN.) =    6.267
  WARNING: THE MAXIMUM OVERLAND FLOW SLOPE, 10.%, IS USED IN Tc CALCULATION!
   100 YEAR RAINFALL INTENSITY(INCH/HOUR) =  7.061
  SUBAREA RUNOFF(CFS) =      0.17
  TOTAL AREA(ACRES) =      0.07   TOTAL RUNOFF(CFS) =      0.17

**************************************************************************
  FLOW PROCESS FROM NODE    402.00 TO NODE    403.00 IS CODE =  53
--------------------------------------------------------------------------
  >>>>>COMPUTE NATURAL MOUNTAIN CHANNEL FLOW<<<<<
  >>>>>TRAVELTIME THRU SUBAREA<<<<<
==========================================================================
  ELEVATION DATA: UPSTREAM(FEET) =   1135.00  DOWNSTREAM(FEET) =   1079.00
  CHANNEL LENGTH THRU SUBAREA(FEET) =   285.00   CHANNEL SLOPE =  0.1965
  SLOPE ADJUSTMENT CURVE USED:
  EFFECTIVE SLOPE = .1582 (PER LACFCD/RCFC&WCD HYDROLOGY MANUAL)
  NOTE: CHANNEL FLOW OF 1. CFS WAS ASSUMED IN VELOCITY ESTIMATION
  CHANNEL FLOW THRU SUBAREA(CFS) =       0.17
```

```
  FLOW VELOCITY(FEET/SEC) =   2.23 (PER LACFCD/RCFC&WCD HYDROLOGY MANUAL)
  TRAVEL TIME(MIN.) =   2.13   Tc(MIN.) =    8.40
  LONGEST FLOWPATH FROM NODE    401.00 TO NODE    403.00 =     385.00 FEET.

****************************************************************************
  FLOW PROCESS FROM NODE    402.00 TO NODE    403.00 IS CODE =  81
----------------------------------------------------------------------------
  >>>>>ADDITION OF SUBAREA TO MAINLINE PEAK FLOW<<<<<
============================================================================
   100 YEAR RAINFALL INTENSITY(INCH/HOUR) =  5.845
  *USER SPECIFIED(SUBAREA):
  OPEN BRUSH FAIR COVER RUNOFF COEFFICIENT = .3500
  S.C.S. CURVE NUMBER (AMC II) =   0
  AREA-AVERAGE RUNOFF COEFFICIENT = 0.3500
  SUBAREA AREA(ACRES) =    0.78   SUBAREA RUNOFF(CFS) =    1.60
  TOTAL AREA(ACRES) =        0.8   TOTAL RUNOFF(CFS) =       1.74
  TC(MIN.) =    8.40
============================================================================
  END OF STUDY SUMMARY:
  TOTAL AREA(ACRES)     =        0.8  TC(MIN.) =      8.40
  PEAK FLOW RATE(CFS)   =       1.74
============================================================================
============================================================================
  END OF RATIONAL METHOD ANALYSIS
```

```
**************************************************************************

          RATIONAL METHOD HYDROLOGY COMPUTER PROGRAM PACKAGE
          Reference: SAN DIEGO COUNTY FLOOD CONTROL DISTRICT
                       2003,1985,1981 HYDROLOGY MANUAL
        (c) Copyright 1982-2007 Advanced Engineering Software (aes)
            Ver. 3.0 Release Date: 06/01/2007  License ID 1355

                          Analysis prepared by:

                     FUSCOE ENGINEERING - SAN DIEGO, INC.
                       6390 GREENWICH DRIVE, SUITE 170
                         SAN DIEGO, CALIFORNIA 92122
                               (858) 554-1500

 ************************** DESCRIPTION OF STUDY **************************
* RANCHO CIELO PARCEL H                                                  *
* 100-YEAR HYDROLOGY EXISTING CONDITIONS BASIN 5                         *
* 02-23-11  02711-001-01                                                 *
 **************************************************************************

  FILE NAME: RCEX5.DAT
  TIME/DATE OF STUDY: 11:58 02/23/2011
--------------------------------------------------------------------------
  USER SPECIFIED HYDROLOGY AND HYDRAULIC MODEL INFORMATION:
--------------------------------------------------------------------------
  2003 SAN DIEGO MANUAL CRITERIA

  USER SPECIFIED STORM EVENT(YEAR) = 100.00
  6-HOUR DURATION PRECIPITATION (INCHES) =   3.100
  SPECIFIED MINIMUM PIPE SIZE(INCH) =  18.00
  SPECIFIED PERCENT OF GRADIENTS(DECIMAL) TO USE FOR FRICTION SLOPE = 0.95
  SAN DIEGO HYDROLOGY MANUAL "C"-VALUES USED FOR RATIONAL METHOD
  NOTE: USE MODIFIED RATIONAL METHOD PROCEDURES FOR CONFLUENCE ANALYSIS
  *USER-DEFINED STREET-SECTIONS FOR COUPLED PIPEFLOW AND STREETFLOW MODEL*
     HALF-  CROWN TO   STREET-CROSSFALL:   CURB  GUTTER-GEOMETRIES:  MANNING
     WIDTH  CROSSFALL  IN-  / OUT-/PARK-  HEIGHT  WIDTH  LIP   HIKE  FACTOR
NO.   (FT)     (FT)    SIDE / SIDE/ WAY    (FT)    (FT)  (FT)  (FT)    (n)
===  =====  =========  =================  ======  ===== ====== ===== =======
  1   30.0     20.0    0.018/0.018/0.020   0.67    2.00 0.0313 0.167 0.0150

  GLOBAL STREET FLOW-DEPTH CONSTRAINTS:
    1. Relative Flow-Depth =  0.00 FEET
       as (Maximum Allowable Street Flow Depth) - (Top-of-Curb)
    2. (Depth)*(Velocity) Constraint =  6.0 (FT*FT/S)
  *SIZE PIPE WITH A FLOW CAPACITY GREATER THAN
   OR EQUAL TO THE UPSTREAM TRIBUTARY PIPE.*

**************************************************************************
  FLOW PROCESS FROM NODE    501.00 TO NODE    502.00 IS CODE =  21
--------------------------------------------------------------------------
  >>>>>RATIONAL METHOD INITIAL SUBAREA ANALYSIS<<<<<
==========================================================================
  *USER SPECIFIED(SUBAREA):
  OPEN BRUSH FAIR COVER RUNOFF COEFFICIENT = .3500
  S.C.S. CURVE NUMBER (AMC II) =   0
  INITIAL SUBAREA FLOW-LENGTH(FEET) =   100.00
  UPSTREAM ELEVATION(FEET) =   1140.00
  DOWNSTREAM ELEVATION(FEET) =   1125.00
  ELEVATION DIFFERENCE(FEET) =     15.00
  SUBAREA OVERLAND TIME OF FLOW(MIN.) =    6.267
  WARNING: THE MAXIMUM OVERLAND FLOW SLOPE, 10.%, IS USED IN Tc CALCULATION!
   100 YEAR RAINFALL INTENSITY(INCH/HOUR) =  7.061
  SUBAREA RUNOFF(CFS) =      0.20
  TOTAL AREA(ACRES) =      0.08   TOTAL RUNOFF(CFS) =      0.20

**************************************************************************
  FLOW PROCESS FROM NODE    502.00 TO NODE    503.00 IS CODE =  53
--------------------------------------------------------------------------
  >>>>>COMPUTE NATURAL MOUNTAIN CHANNEL FLOW<<<<<
  >>>>>TRAVELTIME THRU SUBAREA<<<<<
==========================================================================
  ELEVATION DATA: UPSTREAM(FEET) =   1125.00  DOWNSTREAM(FEET) =   1084.00
  CHANNEL LENGTH THRU SUBAREA(FEET) =   199.00   CHANNEL SLOPE =  0.2060
  SLOPE ADJUSTMENT CURVE USED:
  EFFECTIVE SLOPE = .1630 (PER LACFCD/RCFC&WCD HYDROLOGY MANUAL)
  NOTE: CHANNEL FLOW OF 1. CFS WAS ASSUMED IN VELOCITY ESTIMATION
  CHANNEL FLOW THRU SUBAREA(CFS) =       0.20
```

```
  FLOW VELOCITY(FEET/SEC) =   2.26 (PER LACFCD/RCFC&WCD HYDROLOGY MANUAL)
  TRAVEL TIME(MIN.) =   1.47   Tc(MIN.) =    7.73
  LONGEST FLOWPATH FROM NODE    501.00 TO NODE    503.00 =     299.00 FEET.

****************************************************************************
  FLOW PROCESS FROM NODE    502.00 TO NODE    503.00 IS CODE =  81
----------------------------------------------------------------------------
  >>>>>ADDITION OF SUBAREA TO MAINLINE PEAK FLOW<<<<<
============================================================================
   100 YEAR RAINFALL INTENSITY(INCH/HOUR) =  6.165
  *USER SPECIFIED(SUBAREA):
  OPEN BRUSH FAIR COVER RUNOFF COEFFICIENT = .3500
  S.C.S. CURVE NUMBER (AMC II) =   0
  AREA-AVERAGE RUNOFF COEFFICIENT = 0.3500
  SUBAREA AREA(ACRES) =    0.93   SUBAREA RUNOFF(CFS) =    2.01
  TOTAL AREA(ACRES) =        1.0   TOTAL RUNOFF(CFS) =       2.18
  TC(MIN.) =    7.73
============================================================================
  END OF STUDY SUMMARY:
  TOTAL AREA(ACRES)     =        1.0  TC(MIN.) =      7.73
  PEAK FLOW RATE(CFS)   =       2.18
============================================================================
============================================================================
  END OF RATIONAL METHOD ANALYSIS
```

100-Year Storm

Proposed Conditions

Weighted Runoff Coefficient Calcs

C Values

Undeveloped	0.35
Pads	0.52
Pavement	0.9

Node to Node	Total Area (ac)	Pads (ac)	Pavement (ac)	Undeveloped (ac)	Weighted C Value	Impervious Area	Pervious Area	% Impervious	C based on %
104-105	0.06	0	0.03	0.03	0.63	0.03	0.03	0.50	0.63
105-106	0.22	0	0.08	0.14	0.55	0.08	0.14	0.36	0.55
108-109	0.35	0.28	0.04	0.03	0.55	0.12	0.23	0.35	0.54
112-121	4.04	0.23	0	3.81	0.36	0.07	3.97	0.02	0.36
114-115	0.97	0.65	0.26	0.06	0.61	0.46	0.52	0.47	0.61
116-117	0.06	0	0.03	0.03	0.63	0.03	0.03	0.50	0.63
117-118	2.11	1.4	0.38	0.33	0.56	0.80	1.31	0.38	0.56
201-202	0.12	0	0.04	0.08	0.53	0.04	0.08	0.33	0.53
202-205	0.19	0	0.07	0.12	0.55	0.07	0.12	0.37	0.55
205-210	1.11	0.25	0.27	0.59	0.52	0.35	0.77	0.31	0.52
207-210	0.93	0.45	0	0.48	0.43	0.14	0.80	0.15	0.43

FUSCOE ENGINEERING
6390 Greenwich Drive, Suite 170
San Diego, California 92122
tel 858.554.1500 ◦ fax 858.597.0335
www.fuscoe.com

Job Name:
Rancho Cielo Parcel H

Job #:
02711-001-01

Date:
4/15/2013

AES File Name:
RCPR#

Node to Node		AES Code	Elev 1 (feet) (Upstream)	Elev 2 (feet) (Downstream)	Basin Length (feet)	Land Use Code	Runoff / Friction Coeff.	Basin Area (ac.)	Description or Comments
Basin 1									
101	102	2	1,148.0	1,146.4	80.0	4	0.52	0.08	
102	103	5	1,146.4	1,145.0	141.0				
102	103	8				4	0.52	0.2	
103	106	3	1,141.0	1,124.2	57.0				
106	106	1							1 OF 2
104	105	2	1,142.0	1,137.0	100.0	4	0.63	0.08	
105	106	6	1,137.0	1,128.0	180.0	4	0.55	0.21	
106	106	1							2 OF 2
106	109	3	1,124.2	1,123.8	37.0				
109	109	1							1 OF 2
107	108	2	1,137.0	1,133.0	100.0	4	0.9	0.04	
108	109	6	1,133.0	1,128.0	92.0	4	0.55	0.35	
109	109	1							2 OF 2
109	110	3	1,123.5	1,121.5	114.0				
110	110	8				4	0.35	0.06	
110	111	3	1,121.5	1,110.0	32.0				
111	112	5	1,110.0	1,092.0	86.0				
111	112	8				4	0.35	0.31	
112	121	5	1,092.0	971.0	539.0				
112	121	8				4	0.36	4.04	
121	121	10							MB #1
113	114	2	1,148.0	1,144.0	100.0	4	0.9	0.07	
114	115	6	1,144.0	1,138.0	251.0	4	0.61	0.97	
115	118	3	1,134.0	1,113.0	393.0				
118	118	1							1 OF 2
116	117	2	1,141.5	1,137.0	100.0	4	0.63	0.06	
117	118	6	1,137.0	1,119.0	464.0	4	0.56	2.12	
118	118	1							2 OF 2
118	119	3	1,113.0	1,091.0	256.0				
119	119	8				4	0.35	0.6	
119	120	3	1,091.0	1,074.0	82.0				
120	121	5	1,074.0	971.0	467.0				
120	121	8				4	0.35	0.94	
121	121	11							Conf. w/ MB #1

FUSCOE ENGINEERING
6390 Greenwich Drive, Suite 170
San Diego, California 92122
tel 858.554.1500 ◦ fax 858.597.0335
www.fuscoe.com

Job Name:
Rancho Cielo Parcel H

Job #:
02711-001-01

Date:
4/15/2013

AES File Name:
RCPR#

Node to Node		AES Code	Elev 1 (feet) (Upstream)	Elev 2 (feet) (Downstream)	Basin Length (feet)	Land Use Code	Runoff / Friction Coeff.	Basin Area (ac.)	Description or Comments
Basin 2									
201	202	2	1,126.0	1,123.0	95.0	4	0.53	0.12	
202	206	6	1,123.0	1,112.0	150.0	4	0.55	0.19	
206	206	1							1 of 2
203	204	2	1,148.0	1,146.4	80.0	4	0.52	0.08	
204	205	5	1,146.4	1,145.0	136.0				
204	205	8				4	0.52	0.15	
205	206	9	1,133.0	1,112.0	191.0	4	0.35	0.22	
206	206	1							2 of 2
206	213	6	1,112.0	1,072.0	582.0	4	0.52	1.1	
213	213	1							1 of 3
207	208	2	1,146.0	1,144.4	80.0	4	0.52	0.07	
208	209	5	1,144.4	1,143.0	92.0				
208	209	8				4	0.52	0.18	
209	213	9	1,132.0	1,072.0	260.0	4	0.43	0.98	
213	213	1							2 of 3
210	211	2	1,142.0	1,140.4	80.0	4	0.52	0.08	
211	212	5	1,140.4	1,139.0	63.0				
211	212	8				4	0.52	0.16	
212	213	9	1,125.0	1,072.0	292.0	4	0.35	0.4	
213	213	1							3 of 3
Basin 3									
301	302	2	1,160.5	1,159.2	95.0	7	0.9	0.04	
302	303	6	1,159.2	1,126.0	674.0	7	0.7	0.57	
Basin 4									
403	404	2	1,128.0	1,124.0	20.0	58	0.35	0.06	
404	402	5	1,124.0	1,079.0	230.0				
402	402	1							1 of 2
401	402	2	1,087.0	1,079.0	80.0	58	0.35	0.08	
402	402	1							2 of 2
Basin 5									
501	502	2	1,124.0	1,114.0	50.0	58	0.35	0.04	
502	503	9	1,114.0	1,110.0	150.0	58	0.35	0.13	

```
**************************************************************************

            RATIONAL METHOD HYDROLOGY COMPUTER PROGRAM PACKAGE
            Reference: SAN DIEGO COUNTY FLOOD CONTROL DISTRICT
                         2003,1985,1981 HYDROLOGY MANUAL
          (c) Copyright 1982-2010 Advanced Engineering Software (aes)
              Ver. 17.0 Release Date: 07/01/2010  License ID 1355

                              Analysis prepared by:

                                 Fuscoe Engineering, Inc.
                              6390 Greenwich Drive, Suite 170
                                    San Diego, CA 92122


 ************************** DESCRIPTION OF STUDY **************************
* RANCHO CIELO PARCEL H                                                   *
* 100-YEAR HYDROLOGY PROPOSED CONDITIONS BASIN 1                          *
* 04-09-13  02711-001-01                                                  *
 **************************************************************************

  FILE NAME: RCPR1.DAT
  TIME/DATE OF STUDY: 11:49 04/09/2013
--------------------------------------------------------------------------
  USER SPECIFIED HYDROLOGY AND HYDRAULIC MODEL INFORMATION:
--------------------------------------------------------------------------
  2003 SAN DIEGO MANUAL CRITERIA

  USER SPECIFIED STORM EVENT(YEAR) = 100.00
  6-HOUR DURATION PRECIPITATION (INCHES) =   3.100
  SPECIFIED MINIMUM PIPE SIZE(INCH) =  18.00
  SPECIFIED PERCENT OF GRADIENTS(DECIMAL) TO USE FOR FRICTION SLOPE = 0.95
  SAN DIEGO HYDROLOGY MANUAL "C"-VALUES USED FOR RATIONAL METHOD
  NOTE: USE MODIFIED RATIONAL METHOD PROCEDURES FOR CONFLUENCE ANALYSIS
  *USER-DEFINED STREET-SECTIONS FOR COUPLED PIPEFLOW AND STREETFLOW MODEL*
     HALF-  CROWN TO   STREET-CROSSFALL:   CURB  GUTTER-GEOMETRIES:  MANNING
     WIDTH  CROSSFALL  IN-  / OUT-/PARK-  HEIGHT  WIDTH  LIP   HIKE  FACTOR
NO.   (FT)     (FT)    SIDE / SIDE/ WAY    (FT)    (FT)  (FT)  (FT)    (n)
===  =====  =========  =================  ======  ===== ====== ===== =======
  1   30.0     20.0    0.018/0.018/0.020   0.67    2.00 0.0313 0.167 0.0150

  GLOBAL STREET FLOW-DEPTH CONSTRAINTS:
    1. Relative Flow-Depth =  0.00 FEET
       as (Maximum Allowable Street Flow Depth) - (Top-of-Curb)
    2. (Depth)*(Velocity) Constraint =  6.0 (FT*FT/S)
  *SIZE PIPE WITH A FLOW CAPACITY GREATER THAN
   OR EQUAL TO THE UPSTREAM TRIBUTARY PIPE.*

**************************************************************************
  FLOW PROCESS FROM NODE    101.00 TO NODE    102.00 IS CODE =  21
--------------------------------------------------------------------------
  >>>>>RATIONAL METHOD INITIAL SUBAREA ANALYSIS<<<<<
==========================================================================
  *USER SPECIFIED(SUBAREA):
  RESIDENTIAL (4.3 DU/AC OR LESS) RUNOFF COEFFICIENT = .5200
  S.C.S. CURVE NUMBER (AMC II) =   0
  INITIAL SUBAREA FLOW-LENGTH(FEET) =    80.00
  UPSTREAM ELEVATION(FEET) =   1148.00
  DOWNSTREAM ELEVATION(FEET) =   1146.40
  ELEVATION DIFFERENCE(FEET) =      1.60
  SUBAREA OVERLAND TIME OF FLOW(MIN.) =    7.412
  WARNING: INITIAL SUBAREA FLOW PATH LENGTH IS GREATER THAN
```

```
          THE MAXIMUM OVERLAND FLOW LENGTH =    80.00
          (Reference: Table 3-1B of Hydrology Manual)
          THE MAXIMUM OVERLAND FLOW LENGTH IS USED IN Tc CALCULATION!
   100 YEAR RAINFALL INTENSITY(INCH/HOUR) =  6.336
  SUBAREA RUNOFF(CFS) =      0.26
  TOTAL AREA(ACRES) =      0.08   TOTAL RUNOFF(CFS) =      0.26

****************************************************************************
  FLOW PROCESS FROM NODE    102.00 TO NODE    103.00 IS CODE =  52
----------------------------------------------------------------------------
  >>>>>COMPUTE NATURAL VALLEY CHANNEL FLOW<<<<<
  >>>>>TRAVELTIME THRU SUBAREA<<<<<
============================================================================
  ELEVATION DATA: UPSTREAM(FEET) =   1146.40  DOWNSTREAM(FEET) =   1145.00
  CHANNEL LENGTH THRU SUBAREA(FEET) =   141.00   CHANNEL SLOPE =  0.0099
  NOTE: CHANNEL FLOW OF 1. CFS WAS ASSUMED IN VELOCITY ESTIMATION
  CHANNEL FLOW THRU SUBAREA(CFS) =       0.26
  FLOW VELOCITY(FEET/SEC) =   1.49 (PER LACFCD/RCFC&WCD HYDROLOGY MANUAL)
  TRAVEL TIME(MIN.) =   1.57   Tc(MIN.) =    8.98
  LONGEST FLOWPATH FROM NODE    101.00 TO NODE    103.00 =     221.00 FEET.

****************************************************************************
  FLOW PROCESS FROM NODE    102.00 TO NODE    103.00 IS CODE =  81
----------------------------------------------------------------------------
  >>>>>ADDITION OF SUBAREA TO MAINLINE PEAK FLOW<<<<<
============================================================================
   100 YEAR RAINFALL INTENSITY(INCH/HOUR) =  5.597
  *USER SPECIFIED(SUBAREA):
  RESIDENTIAL (4.3 DU/AC OR LESS) RUNOFF COEFFICIENT = .5200
  S.C.S. CURVE NUMBER (AMC II) =   0
  AREA-AVERAGE RUNOFF COEFFICIENT = 0.5200
  SUBAREA AREA(ACRES) =    0.20   SUBAREA RUNOFF(CFS) =    0.58
  TOTAL AREA(ACRES) =        0.3   TOTAL RUNOFF(CFS) =       0.81
  TC(MIN.) =    8.98

****************************************************************************
  FLOW PROCESS FROM NODE    103.00 TO NODE    106.00 IS CODE =  31
----------------------------------------------------------------------------
  >>>>>COMPUTE PIPE-FLOW TRAVEL TIME THRU SUBAREA<<<<<
  >>>>>USING COMPUTER-ESTIMATED PIPESIZE (NON-PRESSURE FLOW)<<<<<
============================================================================
  ELEVATION DATA: UPSTREAM(FEET) =  1141.00  DOWNSTREAM(FEET) =  1124.20
  FLOW LENGTH(FEET) =    57.00   MANNING'S N =  0.012
  ESTIMATED PIPE DIAMETER(INCH) INCREASED TO 18.000
  DEPTH OF FLOW IN  18.0 INCH PIPE IS   1.5 INCHES
  PIPE-FLOW VELOCITY(FEET/SEC.) =  11.95
  ESTIMATED PIPE DIAMETER(INCH) =  18.00    NUMBER OF PIPES =   1
  PIPE-FLOW(CFS) =       0.81
  PIPE TRAVEL TIME(MIN.) =   0.08    Tc(MIN.) =    9.06
  LONGEST FLOWPATH FROM NODE    101.00 TO NODE    106.00 =     278.00 FEET.

****************************************************************************
  FLOW PROCESS FROM NODE    106.00 TO NODE    106.00 IS CODE =   1
----------------------------------------------------------------------------
  >>>>>DESIGNATE INDEPENDENT STREAM FOR CONFLUENCE<<<<<
============================================================================
  TOTAL NUMBER OF STREAMS =  2
  CONFLUENCE VALUES USED FOR INDEPENDENT STREAM  1 ARE:
  TIME OF CONCENTRATION(MIN.) =    9.06
  RAINFALL INTENSITY(INCH/HR) =   5.57
  TOTAL STREAM AREA(ACRES) =     0.28
  PEAK FLOW RATE(CFS) AT CONFLUENCE =      0.81
```

```
****************************************************************************
  FLOW PROCESS FROM NODE    104.00 TO NODE    105.00 IS CODE =  21
----------------------------------------------------------------------------
  >>>>>RATIONAL METHOD INITIAL SUBAREA ANALYSIS<<<<<
============================================================================
  *USER SPECIFIED(SUBAREA):
  RESIDENTIAL (4.3 DU/AC OR LESS) RUNOFF COEFFICIENT = .6300
  S.C.S. CURVE NUMBER (AMC II) =   0
  INITIAL SUBAREA FLOW-LENGTH(FEET) =   100.00
  UPSTREAM ELEVATION(FEET) =   1142.00
  DOWNSTREAM ELEVATION(FEET) =   1137.00
  ELEVATION DIFFERENCE(FEET) =      5.00
  SUBAREA OVERLAND TIME OF FLOW(MIN.) =    4.948
   100 YEAR RAINFALL INTENSITY(INCH/HOUR) =  8.168
  NOTE: RAINFALL INTENSITY IS BASED ON Tc = 5-MINUTE.
  SUBAREA RUNOFF(CFS) =      0.41
  TOTAL AREA(ACRES) =      0.08   TOTAL RUNOFF(CFS) =      0.41

****************************************************************************
  FLOW PROCESS FROM NODE    105.00 TO NODE    106.00 IS CODE =  62
----------------------------------------------------------------------------
  >>>>>COMPUTE STREET FLOW TRAVEL TIME THRU SUBAREA<<<<<
  >>>>>(STREET TABLE SECTION #  1 USED)<<<<<
============================================================================
  UPSTREAM ELEVATION(FEET) = 1137.00  DOWNSTREAM ELEVATION(FEET) = 1128.00
  STREET LENGTH(FEET) =   180.00   CURB HEIGHT(INCHES) =  8.0
  STREET HALFWIDTH(FEET) = 30.00

  DISTANCE FROM CROWN TO CROSSFALL GRADEBREAK(FEET) =  20.00
  INSIDE STREET CROSSFALL(DECIMAL) =  0.018
  OUTSIDE STREET CROSSFALL(DECIMAL)  =  0.018

  SPECIFIED NUMBER OF HALFSTREETS CARRYING RUNOFF =  1
  STREET PARKWAY CROSSFALL(DECIMAL)  =  0.020
  Manning's FRICTION FACTOR for Streetflow Section(curb-to-curb) =   0.0150
  Manning's FRICTION FACTOR for Back-of-Walk Flow Section =   0.0200

    **TRAVEL TIME COMPUTED USING ESTIMATED FLOW(CFS) =       0.85
    STREETFLOW MODEL RESULTS USING ESTIMATED FLOW:
    STREET FLOW DEPTH(FEET) =  0.20
    HALFSTREET FLOOD WIDTH(FEET) =    2.00
    AVERAGE FLOW VELOCITY(FEET/SEC.) =    4.86
    PRODUCT OF DEPTH&VELOCITY(FT*FT/SEC.) =    0.96
  STREET FLOW TRAVEL TIME(MIN.) =   0.62   Tc(MIN.) =    5.57
   100 YEAR RAINFALL INTENSITY(INCH/HOUR) =  7.622
  *USER SPECIFIED(SUBAREA):
  RESIDENTIAL (4.3 DU/AC OR LESS) RUNOFF COEFFICIENT = .5500
  S.C.S. CURVE NUMBER (AMC II) =   0
  AREA-AVERAGE RUNOFF COEFFICIENT =  0.572
  SUBAREA AREA(ACRES) =    0.21      SUBAREA RUNOFF(CFS) =    0.88
  TOTAL AREA(ACRES) =        0.3        PEAK FLOW RATE(CFS) =       1.26

  END OF SUBAREA STREET FLOW HYDRAULICS:
  DEPTH(FEET) = 0.23   HALFSTREET FLOOD WIDTH(FEET) =   3.53
  FLOW VELOCITY(FEET/SEC.) =  4.14   DEPTH*VELOCITY(FT*FT/SEC.) =   0.93
  LONGEST FLOWPATH FROM NODE    104.00 TO NODE    106.00 =     280.00 FEET.

****************************************************************************
  FLOW PROCESS FROM NODE    106.00 TO NODE    106.00 IS CODE =   1
----------------------------------------------------------------------------
  >>>>>DESIGNATE INDEPENDENT STREAM FOR CONFLUENCE<<<<<
  >>>>>AND COMPUTE VARIOUS CONFLUENCED STREAM VALUES<<<<<
============================================================================
```

```
  TOTAL NUMBER OF STREAMS =  2
  CONFLUENCE VALUES USED FOR INDEPENDENT STREAM  2 ARE:
  TIME OF CONCENTRATION(MIN.) =    5.57
  RAINFALL INTENSITY(INCH/HR) =   7.62
  TOTAL STREAM AREA(ACRES) =     0.29
  PEAK FLOW RATE(CFS) AT CONFLUENCE =      1.26

  ** CONFLUENCE DATA **
  STREAM     RUNOFF       Tc      INTENSITY      AREA
  NUMBER      (CFS)     (MIN.)   (INCH/HOUR)    (ACRE)
      1        0.81     9.06        5.565          0.28
      2        1.26     5.57        7.622          0.29

  RAINFALL INTENSITY AND TIME OF CONCENTRATION RATIO
  CONFLUENCE FORMULA USED FOR  2 STREAMS.

  ** PEAK FLOW RATE TABLE **
  STREAM     RUNOFF       Tc      INTENSITY
  NUMBER      (CFS)    (MIN.)   (INCH/HOUR)
      1        1.76     5.57       7.622
      2        1.74     9.06       5.565

  COMPUTED CONFLUENCE ESTIMATES ARE AS FOLLOWS:
  PEAK FLOW RATE(CFS) =       1.76   Tc(MIN.) =    5.57
  TOTAL AREA(ACRES) =        0.6
  LONGEST FLOWPATH FROM NODE    104.00 TO NODE    106.00 =     280.00 FEET.

****************************************************************************
  FLOW PROCESS FROM NODE    106.00 TO NODE    109.00 IS CODE =  31
----------------------------------------------------------------------------
  >>>>>COMPUTE PIPE-FLOW TRAVEL TIME THRU SUBAREA<<<<<
  >>>>>USING COMPUTER-ESTIMATED PIPESIZE (NON-PRESSURE FLOW)<<<<<
============================================================================
  ELEVATION DATA: UPSTREAM(FEET) =  1124.20  DOWNSTREAM(FEET) =  1123.80
  FLOW LENGTH(FEET) =    37.00   MANNING'S N =  0.012
  ESTIMATED PIPE DIAMETER(INCH) INCREASED TO 18.000
  DEPTH OF FLOW IN  18.0 INCH PIPE IS   4.8 INCHES
  PIPE-FLOW VELOCITY(FEET/SEC.) =   4.72
  ESTIMATED PIPE DIAMETER(INCH) =  18.00    NUMBER OF PIPES =   1
  PIPE-FLOW(CFS) =       1.76
  PIPE TRAVEL TIME(MIN.) =   0.13    Tc(MIN.) =    5.70
  LONGEST FLOWPATH FROM NODE    104.00 TO NODE    109.00 =     317.00 FEET.

****************************************************************************
  FLOW PROCESS FROM NODE    109.00 TO NODE    109.00 IS CODE =   1
----------------------------------------------------------------------------
  >>>>>DESIGNATE INDEPENDENT STREAM FOR CONFLUENCE<<<<<
============================================================================
  TOTAL NUMBER OF STREAMS =  2
  CONFLUENCE VALUES USED FOR INDEPENDENT STREAM  1 ARE:
  TIME OF CONCENTRATION(MIN.) =    5.70
  RAINFALL INTENSITY(INCH/HR) =   7.51
  TOTAL STREAM AREA(ACRES) =     0.57
  PEAK FLOW RATE(CFS) AT CONFLUENCE =      1.76

****************************************************************************
  FLOW PROCESS FROM NODE    107.00 TO NODE    108.00 IS CODE =  21
----------------------------------------------------------------------------
  >>>>>RATIONAL METHOD INITIAL SUBAREA ANALYSIS<<<<<
============================================================================
  *USER SPECIFIED(SUBAREA):
  RESIDENTIAL (4.3 DU/AC OR LESS) RUNOFF COEFFICIENT = .9000
  S.C.S. CURVE NUMBER (AMC II) =   0
```

```
  INITIAL SUBAREA FLOW-LENGTH(FEET) =   100.00
  UPSTREAM ELEVATION(FEET) =   1137.00
  DOWNSTREAM ELEVATION(FEET) =   1133.00
  ELEVATION DIFFERENCE(FEET) =      4.00
  SUBAREA OVERLAND TIME OF FLOW(MIN.) =    2.239
  WARNING: INITIAL SUBAREA FLOW PATH LENGTH IS GREATER THAN
           THE MAXIMUM OVERLAND FLOW LENGTH =    97.50
           (Reference: Table 3-1B of Hydrology Manual)
           THE MAXIMUM OVERLAND FLOW LENGTH IS USED IN Tc CALCULATION!
   100 YEAR RAINFALL INTENSITY(INCH/HOUR) =  8.168
  NOTE: RAINFALL INTENSITY IS BASED ON Tc = 5-MINUTE.
  SUBAREA RUNOFF(CFS) =      0.29
  TOTAL AREA(ACRES) =      0.04   TOTAL RUNOFF(CFS) =      0.29

****************************************************************************
  FLOW PROCESS FROM NODE    108.00 TO NODE    109.00 IS CODE =  62
----------------------------------------------------------------------------
  >>>>>COMPUTE STREET FLOW TRAVEL TIME THRU SUBAREA<<<<<
  >>>>>(STREET TABLE SECTION #  1 USED)<<<<<
============================================================================
  UPSTREAM ELEVATION(FEET) = 1133.00  DOWNSTREAM ELEVATION(FEET) = 1128.00
  STREET LENGTH(FEET) =    92.00   CURB HEIGHT(INCHES) =  8.0
  STREET HALFWIDTH(FEET) = 30.00

  DISTANCE FROM CROWN TO CROSSFALL GRADEBREAK(FEET) =  20.00
  INSIDE STREET CROSSFALL(DECIMAL) =  0.018
  OUTSIDE STREET CROSSFALL(DECIMAL)  =  0.018

  SPECIFIED NUMBER OF HALFSTREETS CARRYING RUNOFF =  1
  STREET PARKWAY CROSSFALL(DECIMAL)  =  0.020
  Manning's FRICTION FACTOR for Streetflow Section(curb-to-curb) =   0.0150
  Manning's FRICTION FACTOR for Back-of-Walk Flow Section =   0.0200

    **TRAVEL TIME COMPUTED USING ESTIMATED FLOW(CFS) =       1.08
    STREETFLOW MODEL RESULTS USING ESTIMATED FLOW:
    STREET FLOW DEPTH(FEET) =  0.20
    HALFSTREET FLOOD WIDTH(FEET) =    2.00
    AVERAGE FLOW VELOCITY(FEET/SEC.) =    5.06
    PRODUCT OF DEPTH&VELOCITY(FT*FT/SEC.) =    1.00
  STREET FLOW TRAVEL TIME(MIN.) =   0.30   Tc(MIN.) =    2.54
   100 YEAR RAINFALL INTENSITY(INCH/HOUR) =  8.168
  NOTE: RAINFALL INTENSITY IS BASED ON Tc = 5-MINUTE.
  *USER SPECIFIED(SUBAREA):
  RESIDENTIAL (4.3 DU/AC OR LESS) RUNOFF COEFFICIENT = .5500
  S.C.S. CURVE NUMBER (AMC II) =   0
  AREA-AVERAGE RUNOFF COEFFICIENT =  0.586
  SUBAREA AREA(ACRES) =    0.35      SUBAREA RUNOFF(CFS) =    1.57
  TOTAL AREA(ACRES) =        0.4        PEAK FLOW RATE(CFS) =       1.87

  END OF SUBAREA STREET FLOW HYDRAULICS:
  DEPTH(FEET) = 0.26   HALFSTREET FLOOD WIDTH(FEET) =   5.22
  FLOW VELOCITY(FEET/SEC.) =  4.27   DEPTH*VELOCITY(FT*FT/SEC.) =   1.09
  LONGEST FLOWPATH FROM NODE    107.00 TO NODE    109.00 =     192.00 FEET.

****************************************************************************
  FLOW PROCESS FROM NODE    109.00 TO NODE    109.00 IS CODE =   1
----------------------------------------------------------------------------
  >>>>>DESIGNATE INDEPENDENT STREAM FOR CONFLUENCE<<<<<
  >>>>>AND COMPUTE VARIOUS CONFLUENCED STREAM VALUES<<<<<
============================================================================
  TOTAL NUMBER OF STREAMS =  2
  CONFLUENCE VALUES USED FOR INDEPENDENT STREAM  2 ARE:
  TIME OF CONCENTRATION(MIN.) =    2.54
```

```
  RAINFALL INTENSITY(INCH/HR) =   8.17
  TOTAL STREAM AREA(ACRES) =     0.39
  PEAK FLOW RATE(CFS) AT CONFLUENCE =      1.87

  ** CONFLUENCE DATA **
  STREAM     RUNOFF       Tc      INTENSITY      AREA
  NUMBER      (CFS)     (MIN.)   (INCH/HOUR)    (ACRE)
      1        1.76     5.70        7.509          0.57
      2        1.87     2.54        8.168          0.39

  RAINFALL INTENSITY AND TIME OF CONCENTRATION RATIO
  CONFLUENCE FORMULA USED FOR  2 STREAMS.

  ** PEAK FLOW RATE TABLE **
  STREAM     RUNOFF       Tc      INTENSITY
  NUMBER      (CFS)    (MIN.)   (INCH/HOUR)
      1        3.49     2.54       8.168
      2        3.48     5.70       7.509

  COMPUTED CONFLUENCE ESTIMATES ARE AS FOLLOWS:
  PEAK FLOW RATE(CFS) =       3.49   Tc(MIN.) =    2.54
  TOTAL AREA(ACRES) =        1.0
  LONGEST FLOWPATH FROM NODE    104.00 TO NODE    109.00 =     317.00 FEET.

****************************************************************************
  FLOW PROCESS FROM NODE    109.00 TO NODE    110.00 IS CODE =  31
----------------------------------------------------------------------------
  >>>>>COMPUTE PIPE-FLOW TRAVEL TIME THRU SUBAREA<<<<<
  >>>>>USING COMPUTER-ESTIMATED PIPESIZE (NON-PRESSURE FLOW)<<<<<
============================================================================
  ELEVATION DATA: UPSTREAM(FEET) =  1123.50  DOWNSTREAM(FEET) =  1121.50
  FLOW LENGTH(FEET) =   114.00   MANNING'S N =  0.012
  ESTIMATED PIPE DIAMETER(INCH) INCREASED TO 18.000
  DEPTH OF FLOW IN  18.0 INCH PIPE IS   6.0 INCHES
  PIPE-FLOW VELOCITY(FEET/SEC.) =   6.81
  ESTIMATED PIPE DIAMETER(INCH) =  18.00    NUMBER OF PIPES =   1
  PIPE-FLOW(CFS) =       3.49
  PIPE TRAVEL TIME(MIN.) =   0.28    Tc(MIN.) =    2.82
  LONGEST FLOWPATH FROM NODE    104.00 TO NODE    110.00 =     431.00 FEET.

****************************************************************************
  FLOW PROCESS FROM NODE    110.00 TO NODE    110.00 IS CODE =  81
----------------------------------------------------------------------------
  >>>>>ADDITION OF SUBAREA TO MAINLINE PEAK FLOW<<<<<
============================================================================
   100 YEAR RAINFALL INTENSITY(INCH/HOUR) =  8.168
  NOTE: RAINFALL INTENSITY IS BASED ON Tc = 5-MINUTE.
  *USER SPECIFIED(SUBAREA):
  RESIDENTIAL (4.3 DU/AC OR LESS) RUNOFF COEFFICIENT = .3500
  S.C.S. CURVE NUMBER (AMC II) =   0
  AREA-AVERAGE RUNOFF COEFFICIENT = 0.5500
  SUBAREA AREA(ACRES) =    0.06   SUBAREA RUNOFF(CFS) =    0.17
  TOTAL AREA(ACRES) =        1.0   TOTAL RUNOFF(CFS) =       4.58
  TC(MIN.) =    2.82

****************************************************************************
  FLOW PROCESS FROM NODE    110.00 TO NODE    111.00 IS CODE =  31
----------------------------------------------------------------------------
  >>>>>COMPUTE PIPE-FLOW TRAVEL TIME THRU SUBAREA<<<<<
  >>>>>USING COMPUTER-ESTIMATED PIPESIZE (NON-PRESSURE FLOW)<<<<<
============================================================================
  ELEVATION DATA: UPSTREAM(FEET) =  1121.50  DOWNSTREAM(FEET) =  1110.00
  FLOW LENGTH(FEET) =    32.00   MANNING'S N =  0.012
```

```
  ESTIMATED PIPE DIAMETER(INCH) INCREASED TO 18.000
  DEPTH OF FLOW IN  18.0 INCH PIPE IS   3.2 INCHES
  PIPE-FLOW VELOCITY(FEET/SEC.) =  21.55
  ESTIMATED PIPE DIAMETER(INCH) =  18.00    NUMBER OF PIPES =   1
  PIPE-FLOW(CFS) =       4.58
  PIPE TRAVEL TIME(MIN.) =   0.02    Tc(MIN.) =    2.85
  LONGEST FLOWPATH FROM NODE    104.00 TO NODE    111.00 =     463.00 FEET.

****************************************************************************
  FLOW PROCESS FROM NODE    111.00 TO NODE    112.00 IS CODE =  53
----------------------------------------------------------------------------
  >>>>>COMPUTE NATURAL MOUNTAIN CHANNEL FLOW<<<<<
  >>>>>TRAVELTIME THRU SUBAREA<<<<<
============================================================================
  ELEVATION DATA: UPSTREAM(FEET) =   1110.00  DOWNSTREAM(FEET) =   1092.00
  CHANNEL LENGTH THRU SUBAREA(FEET) =    86.00   CHANNEL SLOPE =  0.2093
  SLOPE ADJUSTMENT CURVE USED:
  EFFECTIVE SLOPE = .1647 (PER LACFCD/RCFC&WCD HYDROLOGY MANUAL)
  CHANNEL FLOW THRU SUBAREA(CFS) =       4.58
  FLOW VELOCITY(FEET/SEC) =   3.77 (PER LACFCD/RCFC&WCD HYDROLOGY MANUAL)
  TRAVEL TIME(MIN.) =   0.38   Tc(MIN.) =    3.23
  LONGEST FLOWPATH FROM NODE    104.00 TO NODE    112.00 =     549.00 FEET.

****************************************************************************
  FLOW PROCESS FROM NODE    111.00 TO NODE    112.00 IS CODE =  81
----------------------------------------------------------------------------
  >>>>>ADDITION OF SUBAREA TO MAINLINE PEAK FLOW<<<<<
============================================================================
   100 YEAR RAINFALL INTENSITY(INCH/HOUR) =  8.168
  NOTE: RAINFALL INTENSITY IS BASED ON Tc = 5-MINUTE.
  *USER SPECIFIED(SUBAREA):
  RESIDENTIAL (4.3 DU/AC OR LESS) RUNOFF COEFFICIENT = .3500
  S.C.S. CURVE NUMBER (AMC II) =   0
  AREA-AVERAGE RUNOFF COEFFICIENT = 0.5034
  SUBAREA AREA(ACRES) =    0.31   SUBAREA RUNOFF(CFS) =    0.89
  TOTAL AREA(ACRES) =       1.3   TOTAL RUNOFF(CFS) =       5.47
  TC(MIN.) =    3.23

****************************************************************************
  FLOW PROCESS FROM NODE    112.00 TO NODE    121.00 IS CODE =  53
----------------------------------------------------------------------------
  >>>>>COMPUTE NATURAL MOUNTAIN CHANNEL FLOW<<<<<
  >>>>>TRAVELTIME THRU SUBAREA<<<<<
============================================================================
  ELEVATION DATA: UPSTREAM(FEET) =   1092.00  DOWNSTREAM(FEET) =    971.00
  CHANNEL LENGTH THRU SUBAREA(FEET) =   539.00   CHANNEL SLOPE =  0.2245
  SLOPE ADJUSTMENT CURVE USED:
  EFFECTIVE SLOPE = .1715 (PER LACFCD/RCFC&WCD HYDROLOGY MANUAL)
  CHANNEL FLOW THRU SUBAREA(CFS) =       5.47
  FLOW VELOCITY(FEET/SEC) =   4.08 (PER LACFCD/RCFC&WCD HYDROLOGY MANUAL)
  TRAVEL TIME(MIN.) =   2.20   Tc(MIN.) =    5.43
  LONGEST FLOWPATH FROM NODE    104.00 TO NODE    121.00 =    1088.00 FEET.

****************************************************************************
  FLOW PROCESS FROM NODE    112.00 TO NODE    121.00 IS CODE =  81
----------------------------------------------------------------------------
  >>>>>ADDITION OF SUBAREA TO MAINLINE PEAK FLOW<<<<<
============================================================================
   100 YEAR RAINFALL INTENSITY(INCH/HOUR) =  7.748
  *USER SPECIFIED(SUBAREA):
  RESIDENTIAL (4.3 DU/AC OR LESS) RUNOFF COEFFICIENT = .3600
  S.C.S. CURVE NUMBER (AMC II) =   0
  AREA-AVERAGE RUNOFF COEFFICIENT = 0.3955
```

```
  SUBAREA AREA(ACRES) =    4.04   SUBAREA RUNOFF(CFS) =   11.27
  TOTAL AREA(ACRES) =        5.4   TOTAL RUNOFF(CFS) =      16.46
  TC(MIN.) =    5.43

****************************************************************************
  FLOW PROCESS FROM NODE    121.00 TO NODE    121.00 IS CODE =  10
----------------------------------------------------------------------------
  >>>>>MAIN-STREAM MEMORY COPIED ONTO MEMORY BANK # 1 <<<<<
============================================================================

****************************************************************************
  FLOW PROCESS FROM NODE    113.00 TO NODE    114.00 IS CODE =  21
----------------------------------------------------------------------------
  >>>>>RATIONAL METHOD INITIAL SUBAREA ANALYSIS<<<<<
============================================================================
  *USER SPECIFIED(SUBAREA):
  RESIDENTIAL (4.3 DU/AC OR LESS) RUNOFF COEFFICIENT = .9000
  S.C.S. CURVE NUMBER (AMC II) =   0
  INITIAL SUBAREA FLOW-LENGTH(FEET) =   100.00
  UPSTREAM ELEVATION(FEET) =   1148.00
  DOWNSTREAM ELEVATION(FEET) =   1144.00
  ELEVATION DIFFERENCE(FEET) =      4.00
  SUBAREA OVERLAND TIME OF FLOW(MIN.) =    2.239
  WARNING: INITIAL SUBAREA FLOW PATH LENGTH IS GREATER THAN
           THE MAXIMUM OVERLAND FLOW LENGTH =    97.50
           (Reference: Table 3-1B of Hydrology Manual)
           THE MAXIMUM OVERLAND FLOW LENGTH IS USED IN Tc CALCULATION!
   100 YEAR RAINFALL INTENSITY(INCH/HOUR) =  8.168
  NOTE: RAINFALL INTENSITY IS BASED ON Tc = 5-MINUTE.
  SUBAREA RUNOFF(CFS) =      0.51
  TOTAL AREA(ACRES) =      0.07   TOTAL RUNOFF(CFS) =      0.51

****************************************************************************
  FLOW PROCESS FROM NODE    114.00 TO NODE    115.00 IS CODE =  62
----------------------------------------------------------------------------
  >>>>>COMPUTE STREET FLOW TRAVEL TIME THRU SUBAREA<<<<<
  >>>>>(STREET TABLE SECTION #  1 USED)<<<<<
============================================================================
  UPSTREAM ELEVATION(FEET) = 1144.00  DOWNSTREAM ELEVATION(FEET) = 1138.00
  STREET LENGTH(FEET) =   251.00   CURB HEIGHT(INCHES) =  8.0
  STREET HALFWIDTH(FEET) = 30.00

  DISTANCE FROM CROWN TO CROSSFALL GRADEBREAK(FEET) =  20.00
  INSIDE STREET CROSSFALL(DECIMAL) =  0.018
  OUTSIDE STREET CROSSFALL(DECIMAL)  =  0.018

  SPECIFIED NUMBER OF HALFSTREETS CARRYING RUNOFF =  1
  STREET PARKWAY CROSSFALL(DECIMAL)  =  0.020
  Manning's FRICTION FACTOR for Streetflow Section(curb-to-curb) =   0.0150
  Manning's FRICTION FACTOR for Back-of-Walk Flow Section =   0.0200

    **TRAVEL TIME COMPUTED USING ESTIMATED FLOW(CFS) =       2.93
    STREETFLOW MODEL RESULTS USING ESTIMATED FLOW:
    STREET FLOW DEPTH(FEET) =  0.32
    HALFSTREET FLOOD WIDTH(FEET) =    8.91
    AVERAGE FLOW VELOCITY(FEET/SEC.) =    3.25
    PRODUCT OF DEPTH&VELOCITY(FT*FT/SEC.) =    1.04
  STREET FLOW TRAVEL TIME(MIN.) =   1.29   Tc(MIN.) =    3.53
   100 YEAR RAINFALL INTENSITY(INCH/HOUR) =  8.168
  NOTE: RAINFALL INTENSITY IS BASED ON Tc = 5-MINUTE.
  *USER SPECIFIED(SUBAREA):
  RESIDENTIAL (4.3 DU/AC OR LESS) RUNOFF COEFFICIENT = .6100
  S.C.S. CURVE NUMBER (AMC II) =   0
```

```
  AREA-AVERAGE RUNOFF COEFFICIENT =  0.630
  SUBAREA AREA(ACRES) =    0.97      SUBAREA RUNOFF(CFS) =    4.83
  TOTAL AREA(ACRES) =        1.0        PEAK FLOW RATE(CFS) =       5.35

  END OF SUBAREA STREET FLOW HYDRAULICS:
  DEPTH(FEET) = 0.37   HALFSTREET FLOOD WIDTH(FEET) =  11.84
  FLOW VELOCITY(FEET/SEC.) =  3.70   DEPTH*VELOCITY(FT*FT/SEC.) =   1.38
  LONGEST FLOWPATH FROM NODE    113.00 TO NODE    115.00 =     351.00 FEET.

****************************************************************************
  FLOW PROCESS FROM NODE    115.00 TO NODE    118.00 IS CODE =  31
----------------------------------------------------------------------------
  >>>>>COMPUTE PIPE-FLOW TRAVEL TIME THRU SUBAREA<<<<<
  >>>>>USING COMPUTER-ESTIMATED PIPESIZE (NON-PRESSURE FLOW)<<<<<
============================================================================
  ELEVATION DATA: UPSTREAM(FEET) =  1134.00  DOWNSTREAM(FEET) =  1113.00
  FLOW LENGTH(FEET) =   393.00   MANNING'S N =  0.012
  ESTIMATED PIPE DIAMETER(INCH) INCREASED TO 18.000
  DEPTH OF FLOW IN  18.0 INCH PIPE IS   5.6 INCHES
  PIPE-FLOW VELOCITY(FEET/SEC.) =  11.46
  ESTIMATED PIPE DIAMETER(INCH) =  18.00    NUMBER OF PIPES =   1
  PIPE-FLOW(CFS) =       5.35
  PIPE TRAVEL TIME(MIN.) =   0.57    Tc(MIN.) =    4.10
  LONGEST FLOWPATH FROM NODE    113.00 TO NODE    118.00 =     744.00 FEET.

****************************************************************************
  FLOW PROCESS FROM NODE    118.00 TO NODE    118.00 IS CODE =   1
----------------------------------------------------------------------------
  >>>>>DESIGNATE INDEPENDENT STREAM FOR CONFLUENCE<<<<<
============================================================================
  TOTAL NUMBER OF STREAMS =  2
  CONFLUENCE VALUES USED FOR INDEPENDENT STREAM  1 ARE:
  TIME OF CONCENTRATION(MIN.) =    4.10
  RAINFALL INTENSITY(INCH/HR) =   8.17
  TOTAL STREAM AREA(ACRES) =     1.04
  PEAK FLOW RATE(CFS) AT CONFLUENCE =      5.35

****************************************************************************
  FLOW PROCESS FROM NODE    116.00 TO NODE    117.00 IS CODE =  21
----------------------------------------------------------------------------
  >>>>>RATIONAL METHOD INITIAL SUBAREA ANALYSIS<<<<<
============================================================================
  *USER SPECIFIED(SUBAREA):
  RESIDENTIAL (4.3 DU/AC OR LESS) RUNOFF COEFFICIENT = .6300
  S.C.S. CURVE NUMBER (AMC II) =   0
  INITIAL SUBAREA FLOW-LENGTH(FEET) =   100.00
  UPSTREAM ELEVATION(FEET) =   1141.50
  DOWNSTREAM ELEVATION(FEET) =   1137.00
  ELEVATION DIFFERENCE(FEET) =      4.50
  SUBAREA OVERLAND TIME OF FLOW(MIN.) =    5.092
  WARNING: INITIAL SUBAREA FLOW PATH LENGTH IS GREATER THAN
           THE MAXIMUM OVERLAND FLOW LENGTH =    98.75
           (Reference: Table 3-1B of Hydrology Manual)
           THE MAXIMUM OVERLAND FLOW LENGTH IS USED IN Tc CALCULATION!
   100 YEAR RAINFALL INTENSITY(INCH/HOUR) =  8.072
  SUBAREA RUNOFF(CFS) =      0.31
  TOTAL AREA(ACRES) =      0.06   TOTAL RUNOFF(CFS) =      0.31

****************************************************************************
  FLOW PROCESS FROM NODE    117.00 TO NODE    118.00 IS CODE =  62
----------------------------------------------------------------------------
  >>>>>COMPUTE STREET FLOW TRAVEL TIME THRU SUBAREA<<<<<
  >>>>>(STREET TABLE SECTION #  1 USED)<<<<<
```

```
==============================================================================
  UPSTREAM ELEVATION(FEET) = 1137.00  DOWNSTREAM ELEVATION(FEET) = 1119.00
  STREET LENGTH(FEET) =   464.00   CURB HEIGHT(INCHES) =  8.0
  STREET HALFWIDTH(FEET) = 30.00

  DISTANCE FROM CROWN TO CROSSFALL GRADEBREAK(FEET) =  20.00
  INSIDE STREET CROSSFALL(DECIMAL) =  0.018
  OUTSIDE STREET CROSSFALL(DECIMAL)  =  0.018

  SPECIFIED NUMBER OF HALFSTREETS CARRYING RUNOFF =  1
  STREET PARKWAY CROSSFALL(DECIMAL)  =  0.020
  Manning's FRICTION FACTOR for Streetflow Section(curb-to-curb) =   0.0150
  Manning's FRICTION FACTOR for Back-of-Walk Flow Section =   0.0200

    **TRAVEL TIME COMPUTED USING ESTIMATED FLOW(CFS) =       4.28
    STREETFLOW MODEL RESULTS USING ESTIMATED FLOW:
    STREET FLOW DEPTH(FEET) =  0.33
    HALFSTREET FLOOD WIDTH(FEET) =    9.53
    AVERAGE FLOW VELOCITY(FEET/SEC.) =    4.26
    PRODUCT OF DEPTH&VELOCITY(FT*FT/SEC.) =    1.42
  STREET FLOW TRAVEL TIME(MIN.) =   1.81   Tc(MIN.) =    6.91
   100 YEAR RAINFALL INTENSITY(INCH/HOUR) =  6.631
  *USER SPECIFIED(SUBAREA):
  RESIDENTIAL (4.3 DU/AC OR LESS) RUNOFF COEFFICIENT = .5600
  S.C.S. CURVE NUMBER (AMC II) =   0
  AREA-AVERAGE RUNOFF COEFFICIENT =  0.562
  SUBAREA AREA(ACRES) =    2.12      SUBAREA RUNOFF(CFS) =    7.87
  TOTAL AREA(ACRES) =        2.2        PEAK FLOW RATE(CFS) =       8.12

  END OF SUBAREA STREET FLOW HYDRAULICS:
  DEPTH(FEET) = 0.39   HALFSTREET FLOOD WIDTH(FEET) =  12.85
  FLOW VELOCITY(FEET/SEC.) =  4.87   DEPTH*VELOCITY(FT*FT/SEC.) =   1.91
  LONGEST FLOWPATH FROM NODE    116.00 TO NODE    118.00 =     564.00 FEET.

****************************************************************************
  FLOW PROCESS FROM NODE    118.00 TO NODE    118.00 IS CODE =   1
----------------------------------------------------------------------------
  >>>>>DESIGNATE INDEPENDENT STREAM FOR CONFLUENCE<<<<<
  >>>>>AND COMPUTE VARIOUS CONFLUENCED STREAM VALUES<<<<<
============================================================================
  TOTAL NUMBER OF STREAMS =  2
  CONFLUENCE VALUES USED FOR INDEPENDENT STREAM  2 ARE:
  TIME OF CONCENTRATION(MIN.) =    6.91
  RAINFALL INTENSITY(INCH/HR) =   6.63
  TOTAL STREAM AREA(ACRES) =     2.18
  PEAK FLOW RATE(CFS) AT CONFLUENCE =      8.12

  ** CONFLUENCE DATA **
  STREAM     RUNOFF       Tc      INTENSITY      AREA
  NUMBER      (CFS)     (MIN.)   (INCH/HOUR)    (ACRE)
      1        5.35     4.10        8.168          1.04
      2        8.12     6.91        6.631          2.18

  RAINFALL INTENSITY AND TIME OF CONCENTRATION RATIO
  CONFLUENCE FORMULA USED FOR  2 STREAMS.

  ** PEAK FLOW RATE TABLE **
  STREAM     RUNOFF      Tc      INTENSITY
  NUMBER      (CFS)    (MIN.)   (INCH/HOUR)
      1       10.17     4.10       8.168
      2       12.46     6.91       6.631

  COMPUTED CONFLUENCE ESTIMATES ARE AS FOLLOWS:
```

```
  PEAK FLOW RATE(CFS) =      12.46   Tc(MIN.) =    6.91
  TOTAL AREA(ACRES) =        3.2
  LONGEST FLOWPATH FROM NODE    113.00 TO NODE    118.00 =     744.00 FEET.

****************************************************************************
  FLOW PROCESS FROM NODE    118.00 TO NODE    119.00 IS CODE =  31
----------------------------------------------------------------------------
  >>>>>COMPUTE PIPE-FLOW TRAVEL TIME THRU SUBAREA<<<<<
  >>>>>USING COMPUTER-ESTIMATED PIPESIZE (NON-PRESSURE FLOW)<<<<<
============================================================================
  ELEVATION DATA: UPSTREAM(FEET) =  1113.00  DOWNSTREAM(FEET) =  1091.00
  FLOW LENGTH(FEET) =   256.00   MANNING'S N =  0.012
  ESTIMATED PIPE DIAMETER(INCH) INCREASED TO 18.000
  DEPTH OF FLOW IN  18.0 INCH PIPE IS   7.7 INCHES
  PIPE-FLOW VELOCITY(FEET/SEC.) =  17.18
  ESTIMATED PIPE DIAMETER(INCH) =  18.00    NUMBER OF PIPES =   1
  PIPE-FLOW(CFS) =      12.46
  PIPE TRAVEL TIME(MIN.) =   0.25    Tc(MIN.) =    7.16
  LONGEST FLOWPATH FROM NODE    113.00 TO NODE    119.00 =    1000.00 FEET.

****************************************************************************
  FLOW PROCESS FROM NODE    119.00 TO NODE    119.00 IS CODE =  81
----------------------------------------------------------------------------
  >>>>>ADDITION OF SUBAREA TO MAINLINE PEAK FLOW<<<<<
============================================================================
   100 YEAR RAINFALL INTENSITY(INCH/HOUR) =  6.482
  *USER SPECIFIED(SUBAREA):
  RESIDENTIAL (4.3 DU/AC OR LESS) RUNOFF COEFFICIENT = .3500
  S.C.S. CURVE NUMBER (AMC II) =   0
  AREA-AVERAGE RUNOFF COEFFICIENT = 0.5470
  SUBAREA AREA(ACRES) =    0.60   SUBAREA RUNOFF(CFS) =    1.36
  TOTAL AREA(ACRES) =        3.8   TOTAL RUNOFF(CFS) =      13.54
  TC(MIN.) =    7.16

****************************************************************************
  FLOW PROCESS FROM NODE    119.00 TO NODE    120.00 IS CODE =  31
----------------------------------------------------------------------------
  >>>>>COMPUTE PIPE-FLOW TRAVEL TIME THRU SUBAREA<<<<<
  >>>>>USING COMPUTER-ESTIMATED PIPESIZE (NON-PRESSURE FLOW)<<<<<
============================================================================
  ELEVATION DATA: UPSTREAM(FEET) =  1091.00  DOWNSTREAM(FEET) =  1074.00
  FLOW LENGTH(FEET) =    82.00   MANNING'S N =  0.012
  ESTIMATED PIPE DIAMETER(INCH) INCREASED TO 18.000
  DEPTH OF FLOW IN  18.0 INCH PIPE IS   6.4 INCHES
  PIPE-FLOW VELOCITY(FEET/SEC.) =  24.22
  ESTIMATED PIPE DIAMETER(INCH) =  18.00    NUMBER OF PIPES =   1
  PIPE-FLOW(CFS) =      13.54
  PIPE TRAVEL TIME(MIN.) =   0.06    Tc(MIN.) =    7.21
  LONGEST FLOWPATH FROM NODE    113.00 TO NODE    120.00 =    1082.00 FEET.

****************************************************************************
  FLOW PROCESS FROM NODE    120.00 TO NODE    121.00 IS CODE =  53
----------------------------------------------------------------------------
  >>>>>COMPUTE NATURAL MOUNTAIN CHANNEL FLOW<<<<<
  >>>>>TRAVELTIME THRU SUBAREA<<<<<
============================================================================
  ELEVATION DATA: UPSTREAM(FEET) =   1074.00  DOWNSTREAM(FEET) =    971.00
  CHANNEL LENGTH THRU SUBAREA(FEET) =   467.00   CHANNEL SLOPE =  0.2206
  SLOPE ADJUSTMENT CURVE USED:
  EFFECTIVE SLOPE = .1702 (PER LACFCD/RCFC&WCD HYDROLOGY MANUAL)
  CHANNEL FLOW THRU SUBAREA(CFS) =      13.54
  FLOW VELOCITY(FEET/SEC) =   5.50 (PER LACFCD/RCFC&WCD HYDROLOGY MANUAL)
  TRAVEL TIME(MIN.) =   1.41   Tc(MIN.) =    8.63
```

```
 LONGEST FLOWPATH FROM NODE    113.00 TO NODE    121.00 =    1549.00 FEET.

****************************************************************************
 FLOW PROCESS FROM NODE    120.00 TO NODE    121.00 IS CODE =  81
----------------------------------------------------------------------------
 >>>>>ADDITION OF SUBAREA TO MAINLINE PEAK FLOW<<<<<
============================================================================
  100 YEAR RAINFALL INTENSITY(INCH/HOUR) =  5.745
 *USER SPECIFIED(SUBAREA):
 RESIDENTIAL (4.3 DU/AC OR LESS) RUNOFF COEFFICIENT = .3500
 S.C.S. CURVE NUMBER (AMC II) =   0
 AREA-AVERAGE RUNOFF COEFFICIENT = 0.5081
 SUBAREA AREA(ACRES) =    0.94   SUBAREA RUNOFF(CFS) =    1.89
 TOTAL AREA(ACRES) =        4.8   TOTAL RUNOFF(CFS) =     13.90
 TC(MIN.) =    8.63

****************************************************************************
 FLOW PROCESS FROM NODE    121.00 TO NODE    121.00 IS CODE =  11
----------------------------------------------------------------------------
 >>>>>CONFLUENCE MEMORY BANK # 1 WITH THE MAIN-STREAM MEMORY<<<<<
============================================================================

 ** MAIN STREAM CONFLUENCE DATA **
 STREAM     RUNOFF      Tc      INTENSITY     AREA
 NUMBER      (CFS)    (MIN.)   (INCH/HOUR)   (ACRE)
     1       13.90     8.63       5.745        4.76
 LONGEST FLOWPATH FROM NODE    113.00 TO NODE    121.00 =    1549.00 FEET.

 ** MEMORY BANK #  1 CONFLUENCE DATA **
 STREAM     RUNOFF      Tc      INTENSITY     AREA
 NUMBER      (CFS)    (MIN.)   (INCH/HOUR)   (ACRE)
     1       16.46     5.43       7.748        5.37
 LONGEST FLOWPATH FROM NODE    104.00 TO NODE    121.00 =    1088.00 FEET.

 ** PEAK FLOW RATE TABLE **
 STREAM    RUNOFF      Tc      INTENSITY
 NUMBER     (CFS)     (MIN.)   (INCH/HOUR)
     1      25.20       5.43        7.748
     2      26.10       8.63        5.745

 COMPUTED CONFLUENCE ESTIMATES ARE AS FOLLOWS:
 PEAK FLOW RATE(CFS) =      26.10   Tc(MIN.) =    8.63
 TOTAL AREA(ACRES) =       10.1
============================================================================
 END OF STUDY SUMMARY:
 TOTAL AREA(ACRES)     =       10.1  TC(MIN.) =      8.63
 PEAK FLOW RATE(CFS)   =      26.10
============================================================================
============================================================================
 END OF RATIONAL METHOD ANALYSIS
```

♀

```
**************************************************************************

            RATIONAL METHOD HYDROLOGY COMPUTER PROGRAM PACKAGE
            Reference: SAN DIEGO COUNTY FLOOD CONTROL DISTRICT
                         2003,1985,1981 HYDROLOGY MANUAL
          (c) Copyright 1982-2010 Advanced Engineering Software (aes)
              Ver. 17.0 Release Date: 07/01/2010  License ID 1355

                              Analysis prepared by:

                                 Fuscoe Engineering, Inc.
                              6390 Greenwich Drive, Suite 170
                                    San Diego, CA 92122


 ************************** DESCRIPTION OF STUDY **************************
* RANCHO CIELO PARCEL H                                                   *
* 100-YEAR HYDROLOGY PROPOSED CONDITIONS BASIN 2                          *
* 04-09-13 02711-001-01                                                   *
 **************************************************************************

  FILE NAME: RCPR2.DAT
  TIME/DATE OF STUDY: 11:14 04/09/2013
--------------------------------------------------------------------------
  USER SPECIFIED HYDROLOGY AND HYDRAULIC MODEL INFORMATION:
--------------------------------------------------------------------------
  2003 SAN DIEGO MANUAL CRITERIA

  USER SPECIFIED STORM EVENT(YEAR) = 100.00
  6-HOUR DURATION PRECIPITATION (INCHES) =   3.100
  SPECIFIED MINIMUM PIPE SIZE(INCH) =  12.00
  SPECIFIED PERCENT OF GRADIENTS(DECIMAL) TO USE FOR FRICTION SLOPE = 0.95
  SAN DIEGO HYDROLOGY MANUAL "C"-VALUES USED FOR RATIONAL METHOD
  NOTE: USE MODIFIED RATIONAL METHOD PROCEDURES FOR CONFLUENCE ANALYSIS
  *USER-DEFINED STREET-SECTIONS FOR COUPLED PIPEFLOW AND STREETFLOW MODEL*
     HALF-  CROWN TO   STREET-CROSSFALL:   CURB  GUTTER-GEOMETRIES:  MANNING
     WIDTH  CROSSFALL  IN-  / OUT-/PARK-  HEIGHT  WIDTH  LIP   HIKE  FACTOR
NO.   (FT)     (FT)    SIDE / SIDE/ WAY    (FT)    (FT)  (FT)  (FT)    (n)
===  =====  =========  =================  ======  ===== ====== ===== =======
  1   30.0     20.0    0.018/0.018/0.020   0.67    2.00 0.0313 0.167 0.0150

  GLOBAL STREET FLOW-DEPTH CONSTRAINTS:
    1. Relative Flow-Depth =  0.00 FEET
       as (Maximum Allowable Street Flow Depth) - (Top-of-Curb)
    2. (Depth)*(Velocity) Constraint =  6.0 (FT*FT/S)
  *SIZE PIPE WITH A FLOW CAPACITY GREATER THAN
   OR EQUAL TO THE UPSTREAM TRIBUTARY PIPE.*

**************************************************************************
  FLOW PROCESS FROM NODE    201.00 TO NODE    202.00 IS CODE =  21
--------------------------------------------------------------------------
  >>>>>RATIONAL METHOD INITIAL SUBAREA ANALYSIS<<<<<
==========================================================================
  *USER SPECIFIED(SUBAREA):
  RESIDENTIAL (4.3 DU/AC OR LESS) RUNOFF COEFFICIENT = .5300
  S.C.S. CURVE NUMBER (AMC II) =   0
  INITIAL SUBAREA FLOW-LENGTH(FEET) =    95.00
  UPSTREAM ELEVATION(FEET) =   1126.00
  DOWNSTREAM ELEVATION(FEET) =   1123.00
  ELEVATION DIFFERENCE(FEET) =      3.00
  SUBAREA OVERLAND TIME OF FLOW(MIN.) =    6.816
   100 YEAR RAINFALL INTENSITY(INCH/HOUR) =  6.688
```

```
  SUBAREA RUNOFF(CFS) =      0.43
  TOTAL AREA(ACRES) =      0.12   TOTAL RUNOFF(CFS) =      0.43

****************************************************************************
  FLOW PROCESS FROM NODE    202.00 TO NODE    206.00 IS CODE =  62
----------------------------------------------------------------------------
  >>>>>COMPUTE STREET FLOW TRAVEL TIME THRU SUBAREA<<<<<
  >>>>>(STREET TABLE SECTION #  1 USED)<<<<<
============================================================================
  UPSTREAM ELEVATION(FEET) = 1123.00  DOWNSTREAM ELEVATION(FEET) = 1112.00
  STREET LENGTH(FEET) =   150.00   CURB HEIGHT(INCHES) =  8.0
  STREET HALFWIDTH(FEET) = 30.00

  DISTANCE FROM CROWN TO CROSSFALL GRADEBREAK(FEET) =  20.00
  INSIDE STREET CROSSFALL(DECIMAL) =  0.018
  OUTSIDE STREET CROSSFALL(DECIMAL)  =  0.018

  SPECIFIED NUMBER OF HALFSTREETS CARRYING RUNOFF =  1
  STREET PARKWAY CROSSFALL(DECIMAL)  =  0.020
  Manning's FRICTION FACTOR for Streetflow Section(curb-to-curb) =   0.0150
  Manning's FRICTION FACTOR for Back-of-Walk Flow Section =   0.0200

    **TRAVEL TIME COMPUTED USING ESTIMATED FLOW(CFS) =       0.76
    STREETFLOW MODEL RESULTS USING ESTIMATED FLOW:
    STREET FLOW DEPTH(FEET) =  0.20
    HALFSTREET FLOOD WIDTH(FEET) =    2.00
    AVERAGE FLOW VELOCITY(FEET/SEC.) =    5.88
    PRODUCT OF DEPTH&VELOCITY(FT*FT/SEC.) =    1.17
  STREET FLOW TRAVEL TIME(MIN.) =   0.43   Tc(MIN.) =    7.24
   100 YEAR RAINFALL INTENSITY(INCH/HOUR) =  6.432
  *USER SPECIFIED(SUBAREA):
  RESIDENTIAL (4.3 DU/AC OR LESS) RUNOFF COEFFICIENT = .5500
  S.C.S. CURVE NUMBER (AMC II) =   0
  AREA-AVERAGE RUNOFF COEFFICIENT =  0.542
  SUBAREA AREA(ACRES) =    0.19      SUBAREA RUNOFF(CFS) =    0.67
  TOTAL AREA(ACRES) =        0.3        PEAK FLOW RATE(CFS) =       1.08

  END OF SUBAREA STREET FLOW HYDRAULICS:
  DEPTH(FEET) = 0.20   HALFSTREET FLOOD WIDTH(FEET) =   2.00
  FLOW VELOCITY(FEET/SEC.) =  5.88   DEPTH*VELOCITY(FT*FT/SEC.) =   1.17
  LONGEST FLOWPATH FROM NODE    201.00 TO NODE    206.00 =     245.00 FEET.

****************************************************************************
  FLOW PROCESS FROM NODE    206.00 TO NODE    206.00 IS CODE =   1
----------------------------------------------------------------------------
  >>>>>DESIGNATE INDEPENDENT STREAM FOR CONFLUENCE<<<<<
============================================================================
  TOTAL NUMBER OF STREAMS =  2
  CONFLUENCE VALUES USED FOR INDEPENDENT STREAM  1 ARE:
  TIME OF CONCENTRATION(MIN.) =    7.24
  RAINFALL INTENSITY(INCH/HR) =   6.43
  TOTAL STREAM AREA(ACRES) =     0.31
  PEAK FLOW RATE(CFS) AT CONFLUENCE =      1.08

****************************************************************************
  FLOW PROCESS FROM NODE    203.00 TO NODE    204.00 IS CODE =  21
----------------------------------------------------------------------------
  >>>>>RATIONAL METHOD INITIAL SUBAREA ANALYSIS<<<<<
============================================================================
  *USER SPECIFIED(SUBAREA):
  RESIDENTIAL (4.3 DU/AC OR LESS) RUNOFF COEFFICIENT = .5200
  S.C.S. CURVE NUMBER (AMC II) =   0
  INITIAL SUBAREA FLOW-LENGTH(FEET) =    80.00
```

```
  UPSTREAM ELEVATION(FEET) =   1148.00
  DOWNSTREAM ELEVATION(FEET) =   1146.40
  ELEVATION DIFFERENCE(FEET) =      1.60
  SUBAREA OVERLAND TIME OF FLOW(MIN.) =    7.412
  WARNING: INITIAL SUBAREA FLOW PATH LENGTH IS GREATER THAN
           THE MAXIMUM OVERLAND FLOW LENGTH =    80.00
           (Reference: Table 3-1B of Hydrology Manual)
           THE MAXIMUM OVERLAND FLOW LENGTH IS USED IN Tc CALCULATION!
   100 YEAR RAINFALL INTENSITY(INCH/HOUR) =  6.336
  SUBAREA RUNOFF(CFS) =      0.26
  TOTAL AREA(ACRES) =      0.08   TOTAL RUNOFF(CFS) =      0.26

****************************************************************************
  FLOW PROCESS FROM NODE    204.00 TO NODE    205.00 IS CODE =  52
----------------------------------------------------------------------------
  >>>>>COMPUTE NATURAL VALLEY CHANNEL FLOW<<<<<
  >>>>>TRAVELTIME THRU SUBAREA<<<<<
============================================================================
  ELEVATION DATA: UPSTREAM(FEET) =   1146.40  DOWNSTREAM(FEET) =   1145.00
  CHANNEL LENGTH THRU SUBAREA(FEET) =   136.00   CHANNEL SLOPE =  0.0103
  NOTE: CHANNEL FLOW OF 1. CFS WAS ASSUMED IN VELOCITY ESTIMATION
  CHANNEL FLOW THRU SUBAREA(CFS) =       0.26
  FLOW VELOCITY(FEET/SEC) =   1.52 (PER LACFCD/RCFC&WCD HYDROLOGY MANUAL)
  TRAVEL TIME(MIN.) =   1.49   Tc(MIN.) =    8.90
  LONGEST FLOWPATH FROM NODE    203.00 TO NODE    205.00 =     216.00 FEET.

****************************************************************************
  FLOW PROCESS FROM NODE    204.00 TO NODE    205.00 IS CODE =  81
----------------------------------------------------------------------------
  >>>>>ADDITION OF SUBAREA TO MAINLINE PEAK FLOW<<<<<
============================================================================
   100 YEAR RAINFALL INTENSITY(INCH/HOUR) =  5.631
  *USER SPECIFIED(SUBAREA):
  RESIDENTIAL (4.3 DU/AC OR LESS) RUNOFF COEFFICIENT = .5200
  S.C.S. CURVE NUMBER (AMC II) =   0
  AREA-AVERAGE RUNOFF COEFFICIENT = 0.5200
  SUBAREA AREA(ACRES) =    0.15   SUBAREA RUNOFF(CFS) =    0.44
  TOTAL AREA(ACRES) =       0.2   TOTAL RUNOFF(CFS) =       0.67
  TC(MIN.) =    8.90

****************************************************************************
  FLOW PROCESS FROM NODE    205.00 TO NODE    206.00 IS CODE =  91
----------------------------------------------------------------------------
  >>>>>COMPUTE "V" GUTTER FLOW TRAVEL TIME THRU SUBAREA<<<<<
============================================================================
  UPSTREAM NODE ELEVATION(FEET) =   1133.00
  DOWNSTREAM NODE ELEVATION(FEET) =   1112.00
  CHANNEL LENGTH THRU SUBAREA(FEET) =   191.00
  "V" GUTTER WIDTH(FEET) =   3.00   GUTTER HIKE(FEET) =  0.500
  PAVEMENT LIP(FEET) =  0.100   MANNING'S N = .0150
  PAVEMENT CROSSFALL(DECIMAL NOTATION) = 0.02000
  MAXIMUM DEPTH(FEET) =   1.00
   100 YEAR RAINFALL INTENSITY(INCH/HOUR) =  5.530
  *USER SPECIFIED(SUBAREA):
  RESIDENTIAL (4.3 DU/AC OR LESS) RUNOFF COEFFICIENT = .3500
  S.C.S. CURVE NUMBER (AMC II) =   0
  TRAVEL TIME COMPUTED USING ESTIMATED FLOW(CFS) =      0.89
  TRAVEL TIME THRU SUBAREA BASED ON VELOCITY(FEET/SEC.) =  12.59
  AVERAGE FLOW DEPTH(FEET) =   0.50   FLOOD WIDTH(FEET) =    3.00
  "V" GUTTER FLOW TRAVEL TIME(MIN.) =   0.25   Tc(MIN.) =    9.15
  SUBAREA AREA(ACRES) =    0.22       SUBAREA RUNOFF(CFS) =    0.43
  AREA-AVERAGE RUNOFF COEFFICIENT =  0.437
  TOTAL AREA(ACRES) =       0.4         PEAK FLOW RATE(CFS) =       1.09
```

```
        NOTE:TRAVEL TIME ESTIMATES BASED ON NORMAL DEPTH
        IN A FLOWING-FULL GUTTER(NORMAL DEPTH = GUTTER HIKE)


  END OF SUBAREA "V" GUTTER HYDRAULICS:
  DEPTH(FEET) =  0.50   FLOOD WIDTH(FEET) =    3.00
  FLOW VELOCITY(FEET/SEC.) =  12.59   DEPTH*VELOCITY(FT*FT/SEC) =   6.29
  LONGEST FLOWPATH FROM NODE    203.00 TO NODE    206.00 =     407.00 FEET.

****************************************************************************
  FLOW PROCESS FROM NODE    206.00 TO NODE    206.00 IS CODE =   1
----------------------------------------------------------------------------
  >>>>>DESIGNATE INDEPENDENT STREAM FOR CONFLUENCE<<<<<
  >>>>>AND COMPUTE VARIOUS CONFLUENCED STREAM VALUES<<<<<
============================================================================
  TOTAL NUMBER OF STREAMS =  2
  CONFLUENCE VALUES USED FOR INDEPENDENT STREAM  2 ARE:
  TIME OF CONCENTRATION(MIN.) =    9.15
  RAINFALL INTENSITY(INCH/HR) =   5.53
  TOTAL STREAM AREA(ACRES) =     0.45
  PEAK FLOW RATE(CFS) AT CONFLUENCE =      1.09

  ** CONFLUENCE DATA **
  STREAM     RUNOFF       Tc      INTENSITY      AREA
  NUMBER      (CFS)     (MIN.)   (INCH/HOUR)    (ACRE)
      1        1.08     7.24        6.432          0.31
      2        1.09     9.15        5.530          0.45

  RAINFALL INTENSITY AND TIME OF CONCENTRATION RATIO
  CONFLUENCE FORMULA USED FOR  2 STREAMS.

  ** PEAK FLOW RATE TABLE **
  STREAM     RUNOFF      Tc      INTENSITY
  NUMBER      (CFS)    (MIN.)   (INCH/HOUR)
      1        1.94     7.24       6.432
      2        2.02     9.15       5.530

  COMPUTED CONFLUENCE ESTIMATES ARE AS FOLLOWS:
  PEAK FLOW RATE(CFS) =       2.02   Tc(MIN.) =    9.15
  TOTAL AREA(ACRES) =        0.8
  LONGEST FLOWPATH FROM NODE    203.00 TO NODE    206.00 =     407.00 FEET.

****************************************************************************
  FLOW PROCESS FROM NODE    206.00 TO NODE    213.00 IS CODE =  62
----------------------------------------------------------------------------
  >>>>>COMPUTE STREET FLOW TRAVEL TIME THRU SUBAREA<<<<<
  >>>>>(STREET TABLE SECTION #  1 USED)<<<<<
============================================================================
  UPSTREAM ELEVATION(FEET) = 1112.00  DOWNSTREAM ELEVATION(FEET) = 1072.00
  STREET LENGTH(FEET) =   582.00   CURB HEIGHT(INCHES) =  8.0
  STREET HALFWIDTH(FEET) = 30.00

  DISTANCE FROM CROWN TO CROSSFALL GRADEBREAK(FEET) =  20.00
  INSIDE STREET CROSSFALL(DECIMAL) =  0.018
  OUTSIDE STREET CROSSFALL(DECIMAL)  =  0.018

  SPECIFIED NUMBER OF HALFSTREETS CARRYING RUNOFF =  1
  STREET PARKWAY CROSSFALL(DECIMAL)  =  0.020
  Manning's FRICTION FACTOR for Streetflow Section(curb-to-curb) =   0.0150
  Manning's FRICTION FACTOR for Back-of-Walk Flow Section =   0.0200

    **TRAVEL TIME COMPUTED USING ESTIMATED FLOW(CFS) =       3.42
```

```
    STREETFLOW MODEL RESULTS USING ESTIMATED FLOW:
    STREET FLOW DEPTH(FEET) =  0.29
    HALFSTREET FLOOD WIDTH(FEET) =    7.28
    AVERAGE FLOW VELOCITY(FEET/SEC.) =    5.12
    PRODUCT OF DEPTH&VELOCITY(FT*FT/SEC.) =    1.50
  STREET FLOW TRAVEL TIME(MIN.) =   1.89   Tc(MIN.) =   11.05
   100 YEAR RAINFALL INTENSITY(INCH/HOUR) =  4.898
  *USER SPECIFIED(SUBAREA):
  RESIDENTIAL (4.3 DU/AC OR LESS) RUNOFF COEFFICIENT = .5200
  S.C.S. CURVE NUMBER (AMC II) =   0
  AREA-AVERAGE RUNOFF COEFFICIENT =  0.504
  SUBAREA AREA(ACRES) =    1.10      SUBAREA RUNOFF(CFS) =    2.80
  TOTAL AREA(ACRES) =        1.9        PEAK FLOW RATE(CFS) =       4.59

  END OF SUBAREA STREET FLOW HYDRAULICS:
  DEPTH(FEET) = 0.31   HALFSTREET FLOOD WIDTH(FEET) =   8.53
  FLOW VELOCITY(FEET/SEC.) =  5.44   DEPTH*VELOCITY(FT*FT/SEC.) =   1.71
  LONGEST FLOWPATH FROM NODE    203.00 TO NODE    213.00 =     989.00 FEET.

****************************************************************************
  FLOW PROCESS FROM NODE    213.00 TO NODE    213.00 IS CODE =   1
----------------------------------------------------------------------------
  >>>>>DESIGNATE INDEPENDENT STREAM FOR CONFLUENCE<<<<<
============================================================================
  TOTAL NUMBER OF STREAMS =  3
  CONFLUENCE VALUES USED FOR INDEPENDENT STREAM  1 ARE:
  TIME OF CONCENTRATION(MIN.) =   11.05
  RAINFALL INTENSITY(INCH/HR) =   4.90
  TOTAL STREAM AREA(ACRES) =     1.86
  PEAK FLOW RATE(CFS) AT CONFLUENCE =      4.59

****************************************************************************
  FLOW PROCESS FROM NODE    207.00 TO NODE    208.00 IS CODE =  21
----------------------------------------------------------------------------
  >>>>>RATIONAL METHOD INITIAL SUBAREA ANALYSIS<<<<<
============================================================================
  *USER SPECIFIED(SUBAREA):
  RESIDENTIAL (4.3 DU/AC OR LESS) RUNOFF COEFFICIENT = .5200
  S.C.S. CURVE NUMBER (AMC II) =   0
  INITIAL SUBAREA FLOW-LENGTH(FEET) =    80.00
  UPSTREAM ELEVATION(FEET) =   1146.00
  DOWNSTREAM ELEVATION(FEET) =   1144.40
  ELEVATION DIFFERENCE(FEET) =      1.60
  SUBAREA OVERLAND TIME OF FLOW(MIN.) =    7.412
  WARNING: INITIAL SUBAREA FLOW PATH LENGTH IS GREATER THAN
           THE MAXIMUM OVERLAND FLOW LENGTH =    80.00
           (Reference: Table 3-1B of Hydrology Manual)
           THE MAXIMUM OVERLAND FLOW LENGTH IS USED IN Tc CALCULATION!
   100 YEAR RAINFALL INTENSITY(INCH/HOUR) =  6.336
  SUBAREA RUNOFF(CFS) =      0.23
  TOTAL AREA(ACRES) =      0.07   TOTAL RUNOFF(CFS) =      0.23

****************************************************************************
  FLOW PROCESS FROM NODE    208.00 TO NODE    209.00 IS CODE =  52
----------------------------------------------------------------------------
  >>>>>COMPUTE NATURAL VALLEY CHANNEL FLOW<<<<<
  >>>>>TRAVELTIME THRU SUBAREA<<<<<
============================================================================
  ELEVATION DATA: UPSTREAM(FEET) =   1144.40  DOWNSTREAM(FEET) =   1143.00
  CHANNEL LENGTH THRU SUBAREA(FEET) =    92.00   CHANNEL SLOPE =  0.0152
  NOTE: CHANNEL FLOW OF 1. CFS WAS ASSUMED IN VELOCITY ESTIMATION
  CHANNEL FLOW THRU SUBAREA(CFS) =       0.23
  FLOW VELOCITY(FEET/SEC) =   1.85 (PER LACFCD/RCFC&WCD HYDROLOGY MANUAL)
```

```
  TRAVEL TIME(MIN.) =   0.83   Tc(MIN.) =    8.24
  LONGEST FLOWPATH FROM NODE    207.00 TO NODE    209.00 =     172.00 FEET.

****************************************************************************
  FLOW PROCESS FROM NODE    208.00 TO NODE    209.00 IS CODE =  81
----------------------------------------------------------------------------
  >>>>>ADDITION OF SUBAREA TO MAINLINE PEAK FLOW<<<<<
============================================================================
   100 YEAR RAINFALL INTENSITY(INCH/HOUR) =  5.918
  *USER SPECIFIED(SUBAREA):
  RESIDENTIAL (4.3 DU/AC OR LESS) RUNOFF COEFFICIENT = .5200
  S.C.S. CURVE NUMBER (AMC II) =   0
  AREA-AVERAGE RUNOFF COEFFICIENT = 0.5200
  SUBAREA AREA(ACRES) =    0.18   SUBAREA RUNOFF(CFS) =    0.55
  TOTAL AREA(ACRES) =        0.2   TOTAL RUNOFF(CFS) =       0.77
  TC(MIN.) =    8.24

****************************************************************************
  FLOW PROCESS FROM NODE    209.00 TO NODE    213.00 IS CODE =  91
----------------------------------------------------------------------------
  >>>>>COMPUTE "V" GUTTER FLOW TRAVEL TIME THRU SUBAREA<<<<<
============================================================================
  UPSTREAM NODE ELEVATION(FEET) =   1132.00
  DOWNSTREAM NODE ELEVATION(FEET) =   1072.00
  CHANNEL LENGTH THRU SUBAREA(FEET) =   260.00
  "V" GUTTER WIDTH(FEET) =   3.00   GUTTER HIKE(FEET) =  0.500
  PAVEMENT LIP(FEET) =  0.100   MANNING'S N = .0150
  PAVEMENT CROSSFALL(DECIMAL NOTATION) = 0.02000
  MAXIMUM DEPTH(FEET) =   1.00
   100 YEAR RAINFALL INTENSITY(INCH/HOUR) =  5.810
  *USER SPECIFIED(SUBAREA):
  RESIDENTIAL (4.3 DU/AC OR LESS) RUNOFF COEFFICIENT = .4300
  S.C.S. CURVE NUMBER (AMC II) =   0
  TRAVEL TIME COMPUTED USING ESTIMATED FLOW(CFS) =      1.99
  TRAVEL TIME THRU SUBAREA BASED ON VELOCITY(FEET/SEC.) =  18.23
  AVERAGE FLOW DEPTH(FEET) =   0.50   FLOOD WIDTH(FEET) =    3.00
  "V" GUTTER FLOW TRAVEL TIME(MIN.) =   0.24   Tc(MIN.) =    8.48
  SUBAREA AREA(ACRES) =    0.98       SUBAREA RUNOFF(CFS) =    2.45
  AREA-AVERAGE RUNOFF COEFFICIENT =  0.448
  TOTAL AREA(ACRES) =        1.2         PEAK FLOW RATE(CFS) =       3.20

         NOTE:TRAVEL TIME ESTIMATES BASED ON NORMAL DEPTH
         IN A FLOWING-FULL GUTTER(NORMAL DEPTH = GUTTER HIKE)


  END OF SUBAREA "V" GUTTER HYDRAULICS:
  DEPTH(FEET) =  0.50   FLOOD WIDTH(FEET) =    3.00
  FLOW VELOCITY(FEET/SEC.) =  18.23   DEPTH*VELOCITY(FT*FT/SEC) =   9.12
  LONGEST FLOWPATH FROM NODE    207.00 TO NODE    213.00 =     432.00 FEET.

****************************************************************************
  FLOW PROCESS FROM NODE    213.00 TO NODE    213.00 IS CODE =   1
----------------------------------------------------------------------------
  >>>>>DESIGNATE INDEPENDENT STREAM FOR CONFLUENCE<<<<<
============================================================================
  TOTAL NUMBER OF STREAMS =  3
  CONFLUENCE VALUES USED FOR INDEPENDENT STREAM  2 ARE:
  TIME OF CONCENTRATION(MIN.) =    8.48
  RAINFALL INTENSITY(INCH/HR) =   5.81
  TOTAL STREAM AREA(ACRES) =     1.23
  PEAK FLOW RATE(CFS) AT CONFLUENCE =      3.20

****************************************************************************
```

```
  FLOW PROCESS FROM NODE    210.00 TO NODE    211.00 IS CODE =  21
----------------------------------------------------------------------------
  >>>>>RATIONAL METHOD INITIAL SUBAREA ANALYSIS<<<<<
============================================================================
  *USER SPECIFIED(SUBAREA):
  RESIDENTIAL (4.3 DU/AC OR LESS) RUNOFF COEFFICIENT = .5200
  S.C.S. CURVE NUMBER (AMC II) =   0
  INITIAL SUBAREA FLOW-LENGTH(FEET) =    80.00
  UPSTREAM ELEVATION(FEET) =   1142.00
  DOWNSTREAM ELEVATION(FEET) =   1140.40
  ELEVATION DIFFERENCE(FEET) =      1.60
  SUBAREA OVERLAND TIME OF FLOW(MIN.) =    7.412
  WARNING: INITIAL SUBAREA FLOW PATH LENGTH IS GREATER THAN
           THE MAXIMUM OVERLAND FLOW LENGTH =    80.00
           (Reference: Table 3-1B of Hydrology Manual)
           THE MAXIMUM OVERLAND FLOW LENGTH IS USED IN Tc CALCULATION!
   100 YEAR RAINFALL INTENSITY(INCH/HOUR) =  6.336
  SUBAREA RUNOFF(CFS) =      0.26
  TOTAL AREA(ACRES) =      0.08   TOTAL RUNOFF(CFS) =      0.26

****************************************************************************
  FLOW PROCESS FROM NODE    211.00 TO NODE    212.00 IS CODE =  52
----------------------------------------------------------------------------
  >>>>>COMPUTE NATURAL VALLEY CHANNEL FLOW<<<<<
  >>>>>TRAVELTIME THRU SUBAREA<<<<<
============================================================================
  ELEVATION DATA: UPSTREAM(FEET) =   1140.40  DOWNSTREAM(FEET) =   1139.00
  CHANNEL LENGTH THRU SUBAREA(FEET) =    63.00   CHANNEL SLOPE =  0.0222
  NOTE: CHANNEL FLOW OF 1. CFS WAS ASSUMED IN VELOCITY ESTIMATION
  CHANNEL FLOW THRU SUBAREA(CFS) =       0.26
  FLOW VELOCITY(FEET/SEC) =   2.24 (PER LACFCD/RCFC&WCD HYDROLOGY MANUAL)
  TRAVEL TIME(MIN.) =   0.47   Tc(MIN.) =    7.88
  LONGEST FLOWPATH FROM NODE    210.00 TO NODE    212.00 =     143.00 FEET.

****************************************************************************
  FLOW PROCESS FROM NODE    211.00 TO NODE    212.00 IS CODE =  81
----------------------------------------------------------------------------
  >>>>>ADDITION OF SUBAREA TO MAINLINE PEAK FLOW<<<<<
============================================================================
   100 YEAR RAINFALL INTENSITY(INCH/HOUR) =  6.090
  *USER SPECIFIED(SUBAREA):
  RESIDENTIAL (4.3 DU/AC OR LESS) RUNOFF COEFFICIENT = .5200
  S.C.S. CURVE NUMBER (AMC II) =   0
  AREA-AVERAGE RUNOFF COEFFICIENT = 0.5200
  SUBAREA AREA(ACRES) =    0.16   SUBAREA RUNOFF(CFS) =    0.51
  TOTAL AREA(ACRES) =       0.2   TOTAL RUNOFF(CFS) =      0.76
  TC(MIN.) =    7.88

****************************************************************************
  FLOW PROCESS FROM NODE    212.00 TO NODE    213.00 IS CODE =  91
----------------------------------------------------------------------------
  >>>>>COMPUTE "V" GUTTER FLOW TRAVEL TIME THRU SUBAREA<<<<<
============================================================================
  UPSTREAM NODE ELEVATION(FEET) =   1125.00
  DOWNSTREAM NODE ELEVATION(FEET) =   1072.00
  CHANNEL LENGTH THRU SUBAREA(FEET) =   292.00
  "V" GUTTER WIDTH(FEET) =   3.00   GUTTER HIKE(FEET) =  0.500
  PAVEMENT LIP(FEET) =  0.100   MANNING'S N = .0150
  PAVEMENT CROSSFALL(DECIMAL NOTATION) = 0.02000
  MAXIMUM DEPTH(FEET) =   1.00
   100 YEAR RAINFALL INTENSITY(INCH/HOUR) =  5.945
  *USER SPECIFIED(SUBAREA):
  RESIDENTIAL (4.3 DU/AC OR LESS) RUNOFF COEFFICIENT = .3500
```

```
  S.C.S. CURVE NUMBER (AMC II) =   0
  TRAVEL TIME COMPUTED USING ESTIMATED FLOW(CFS) =      1.18
  TRAVEL TIME THRU SUBAREA BASED ON VELOCITY(FEET/SEC.) =  16.17
  AVERAGE FLOW DEPTH(FEET) =   0.50   FLOOD WIDTH(FEET) =    3.00
  "V" GUTTER FLOW TRAVEL TIME(MIN.) =   0.30   Tc(MIN.) =    8.18
  SUBAREA AREA(ACRES) =    0.40       SUBAREA RUNOFF(CFS) =    0.83
  AREA-AVERAGE RUNOFF COEFFICIENT =  0.414
  TOTAL AREA(ACRES) =        0.6         PEAK FLOW RATE(CFS) =       1.57

         NOTE:TRAVEL TIME ESTIMATES BASED ON NORMAL DEPTH
         IN A FLOWING-FULL GUTTER(NORMAL DEPTH = GUTTER HIKE)


  END OF SUBAREA "V" GUTTER HYDRAULICS:
  DEPTH(FEET) =  0.50   FLOOD WIDTH(FEET) =    3.00
  FLOW VELOCITY(FEET/SEC.) =  16.17   DEPTH*VELOCITY(FT*FT/SEC) =   8.09
  LONGEST FLOWPATH FROM NODE    210.00 TO NODE    213.00 =     435.00 FEET.

****************************************************************************
  FLOW PROCESS FROM NODE    213.00 TO NODE    213.00 IS CODE =   1
----------------------------------------------------------------------------
  >>>>>DESIGNATE INDEPENDENT STREAM FOR CONFLUENCE<<<<<
  >>>>>AND COMPUTE VARIOUS CONFLUENCED STREAM VALUES<<<<<
============================================================================
  TOTAL NUMBER OF STREAMS =  3
  CONFLUENCE VALUES USED FOR INDEPENDENT STREAM  3 ARE:
  TIME OF CONCENTRATION(MIN.) =    8.18
  RAINFALL INTENSITY(INCH/HR) =   5.94
  TOTAL STREAM AREA(ACRES) =     0.64
  PEAK FLOW RATE(CFS) AT CONFLUENCE =      1.57

  ** CONFLUENCE DATA **
  STREAM     RUNOFF       Tc      INTENSITY      AREA
  NUMBER      (CFS)     (MIN.)   (INCH/HOUR)    (ACRE)
      1        4.59    11.05        4.898          1.86
      2        3.20     8.48        5.810          1.23
      3        1.57     8.18        5.945          0.64

  RAINFALL INTENSITY AND TIME OF CONCENTRATION RATIO
  CONFLUENCE FORMULA USED FOR  3 STREAMS.

  ** PEAK FLOW RATE TABLE **
  STREAM     RUNOFF      Tc      INTENSITY
  NUMBER      (CFS)    (MIN.)   (INCH/HOUR)
      1        8.45     8.18       5.945
      2        8.61     8.48       5.810
      3        8.59    11.05       4.898

  COMPUTED CONFLUENCE ESTIMATES ARE AS FOLLOWS:
  PEAK FLOW RATE(CFS) =       8.61   Tc(MIN.) =    8.48
  TOTAL AREA(ACRES) =        3.7
  LONGEST FLOWPATH FROM NODE    203.00 TO NODE    213.00 =     989.00 FEET.
============================================================================
  END OF STUDY SUMMARY:
  TOTAL AREA(ACRES)     =        3.7  TC(MIN.) =      8.48
  PEAK FLOW RATE(CFS)   =       8.61
============================================================================
============================================================================
  END OF RATIONAL METHOD ANALYSIS
```

♀

```
**************************************************************************

            RATIONAL METHOD HYDROLOGY COMPUTER PROGRAM PACKAGE
            Reference: SAN DIEGO COUNTY FLOOD CONTROL DISTRICT
                         2003,1985,1981 HYDROLOGY MANUAL
          (c) Copyright 1982-2010 Advanced Engineering Software (aes)
              Ver. 17.0 Release Date: 07/01/2010  License ID 1355

                              Analysis prepared by:

                                 Fuscoe Engineering, Inc.
                              6390 Greenwich Drive, Suite 170
                                    San Diego, CA 92122


 ************************** DESCRIPTION OF STUDY **************************
* RANCHO CIELO PARCEL H                                                   *
* 100-YEAR HYDROLOGY PROPOSED CONDITIONS BASIN 3                          *
* 04-09-13  02711-001-01                                                  *
 **************************************************************************

  FILE NAME: RCPR3.DAT
  TIME/DATE OF STUDY: 11:18 04/09/2013
--------------------------------------------------------------------------
  USER SPECIFIED HYDROLOGY AND HYDRAULIC MODEL INFORMATION:
--------------------------------------------------------------------------
  2003 SAN DIEGO MANUAL CRITERIA

  USER SPECIFIED STORM EVENT(YEAR) = 100.00
  6-HOUR DURATION PRECIPITATION (INCHES) =   3.100
  SPECIFIED MINIMUM PIPE SIZE(INCH) =  18.00
  SPECIFIED PERCENT OF GRADIENTS(DECIMAL) TO USE FOR FRICTION SLOPE = 0.95
  SAN DIEGO HYDROLOGY MANUAL "C"-VALUES USED FOR RATIONAL METHOD
  NOTE: USE MODIFIED RATIONAL METHOD PROCEDURES FOR CONFLUENCE ANALYSIS
  *USER-DEFINED STREET-SECTIONS FOR COUPLED PIPEFLOW AND STREETFLOW MODEL*
     HALF-  CROWN TO   STREET-CROSSFALL:   CURB  GUTTER-GEOMETRIES:  MANNING
     WIDTH  CROSSFALL  IN-  / OUT-/PARK-  HEIGHT  WIDTH  LIP   HIKE  FACTOR
NO.   (FT)     (FT)    SIDE / SIDE/ WAY    (FT)    (FT)  (FT)  (FT)    (n)
===  =====  =========  =================  ======  ===== ====== ===== =======
  1   30.0     20.0    0.018/0.018/0.020   0.67    2.00 0.0313 0.167 0.0150

  GLOBAL STREET FLOW-DEPTH CONSTRAINTS:
    1. Relative Flow-Depth =  0.00 FEET
       as (Maximum Allowable Street Flow Depth) - (Top-of-Curb)
    2. (Depth)*(Velocity) Constraint =  6.0 (FT*FT/S)
  *SIZE PIPE WITH A FLOW CAPACITY GREATER THAN
   OR EQUAL TO THE UPSTREAM TRIBUTARY PIPE.*

**************************************************************************
  FLOW PROCESS FROM NODE    301.00 TO NODE    302.00 IS CODE =  21
--------------------------------------------------------------------------
  >>>>>RATIONAL METHOD INITIAL SUBAREA ANALYSIS<<<<<
==========================================================================
  *USER SPECIFIED(SUBAREA):
  RESIDENTIAL (14.5 DU/AC OR LESS) RUNOFF COEFFICIENT = .9000
  S.C.S. CURVE NUMBER (AMC II) =   0
  INITIAL SUBAREA FLOW-LENGTH(FEET) =    95.00
  UPSTREAM ELEVATION(FEET) =   1160.50
  DOWNSTREAM ELEVATION(FEET) =   1159.20
  ELEVATION DIFFERENCE(FEET) =      1.30
  SUBAREA OVERLAND TIME OF FLOW(MIN.) =    2.723
  WARNING: INITIAL SUBAREA FLOW PATH LENGTH IS GREATER THAN
```

```
          THE MAXIMUM OVERLAND FLOW LENGTH =    70.53
          (Reference: Table 3-1B of Hydrology Manual)
          THE MAXIMUM OVERLAND FLOW LENGTH IS USED IN Tc CALCULATION!
   100 YEAR RAINFALL INTENSITY(INCH/HOUR) =  8.168
  NOTE: RAINFALL INTENSITY IS BASED ON Tc = 5-MINUTE.
  SUBAREA RUNOFF(CFS) =      0.29
  TOTAL AREA(ACRES) =      0.04   TOTAL RUNOFF(CFS) =      0.29

****************************************************************************
  FLOW PROCESS FROM NODE    302.00 TO NODE    303.00 IS CODE =  62
----------------------------------------------------------------------------
  >>>>>COMPUTE STREET FLOW TRAVEL TIME THRU SUBAREA<<<<<
  >>>>>(STREET TABLE SECTION #  1 USED)<<<<<
============================================================================
  UPSTREAM ELEVATION(FEET) = 1159.20  DOWNSTREAM ELEVATION(FEET) = 1126.00
  STREET LENGTH(FEET) =   674.00   CURB HEIGHT(INCHES) =  8.0
  STREET HALFWIDTH(FEET) = 30.00

  DISTANCE FROM CROWN TO CROSSFALL GRADEBREAK(FEET) =  20.00
  INSIDE STREET CROSSFALL(DECIMAL) =  0.018
  OUTSIDE STREET CROSSFALL(DECIMAL)  =  0.018

  SPECIFIED NUMBER OF HALFSTREETS CARRYING RUNOFF =  1
  STREET PARKWAY CROSSFALL(DECIMAL)  =  0.020
  Manning's FRICTION FACTOR for Streetflow Section(curb-to-curb) =   0.0150
  Manning's FRICTION FACTOR for Back-of-Walk Flow Section =   0.0200

    **TRAVEL TIME COMPUTED USING ESTIMATED FLOW(CFS) =       1.85
    STREETFLOW MODEL RESULTS USING ESTIMATED FLOW:
    STREET FLOW DEPTH(FEET) =  0.26
    HALFSTREET FLOOD WIDTH(FEET) =    5.41
    AVERAGE FLOW VELOCITY(FEET/SEC.) =    4.06
    PRODUCT OF DEPTH&VELOCITY(FT*FT/SEC.) =    1.05
  STREET FLOW TRAVEL TIME(MIN.) =   2.77   Tc(MIN.) =    5.49
   100 YEAR RAINFALL INTENSITY(INCH/HOUR) =  7.689
  *USER SPECIFIED(SUBAREA):
  RESIDENTIAL (14.5 DU/AC OR LESS) RUNOFF COEFFICIENT = .7000
  S.C.S. CURVE NUMBER (AMC II) =   0
  AREA-AVERAGE RUNOFF COEFFICIENT =  0.713
  SUBAREA AREA(ACRES) =    0.57      SUBAREA RUNOFF(CFS) =    3.07
  TOTAL AREA(ACRES) =        0.6        PEAK FLOW RATE(CFS) =       3.34

  END OF SUBAREA STREET FLOW HYDRAULICS:
  DEPTH(FEET) = 0.30   HALFSTREET FLOOD WIDTH(FEET) =   7.91
  FLOW VELOCITY(FEET/SEC.) =  4.45   DEPTH*VELOCITY(FT*FT/SEC.) =   1.35
  LONGEST FLOWPATH FROM NODE    301.00 TO NODE    303.00 =     769.00 FEET.
============================================================================
  END OF STUDY SUMMARY:
  TOTAL AREA(ACRES)     =        0.6  TC(MIN.) =      5.49
  PEAK FLOW RATE(CFS)   =       3.34
============================================================================
============================================================================
  END OF RATIONAL METHOD ANALYSIS
```

♀

```
**************************************************************************

            RATIONAL METHOD HYDROLOGY COMPUTER PROGRAM PACKAGE
            Reference: SAN DIEGO COUNTY FLOOD CONTROL DISTRICT
                         2003,1985,1981 HYDROLOGY MANUAL
          (c) Copyright 1982-2010 Advanced Engineering Software (aes)
              Ver. 17.0 Release Date: 07/01/2010  License ID 1355

                              Analysis prepared by:

                                 Fuscoe Engineering, Inc.
                              6390 Greenwich Drive, Suite 170
                                    San Diego, CA 92122


 ************************** DESCRIPTION OF STUDY **************************
* RANCHO CIELO PARCEL H                                                   *
* 100-YEAR HYDROLOGY PROPOSED CONDITIONS BASIN 4                          *
* 04-09-13  02711-001-01                                                  *
 **************************************************************************

  FILE NAME: RCPR4.DAT
  TIME/DATE OF STUDY: 11:20 04/09/2013
--------------------------------------------------------------------------
  USER SPECIFIED HYDROLOGY AND HYDRAULIC MODEL INFORMATION:
--------------------------------------------------------------------------
  2003 SAN DIEGO MANUAL CRITERIA

  USER SPECIFIED STORM EVENT(YEAR) = 100.00
  6-HOUR DURATION PRECIPITATION (INCHES) =   3.100
  SPECIFIED MINIMUM PIPE SIZE(INCH) =  18.00
  SPECIFIED PERCENT OF GRADIENTS(DECIMAL) TO USE FOR FRICTION SLOPE = 0.95
  SAN DIEGO HYDROLOGY MANUAL "C"-VALUES USED FOR RATIONAL METHOD
  NOTE: USE MODIFIED RATIONAL METHOD PROCEDURES FOR CONFLUENCE ANALYSIS
  *USER-DEFINED STREET-SECTIONS FOR COUPLED PIPEFLOW AND STREETFLOW MODEL*
     HALF-  CROWN TO   STREET-CROSSFALL:   CURB  GUTTER-GEOMETRIES:  MANNING
     WIDTH  CROSSFALL  IN-  / OUT-/PARK-  HEIGHT  WIDTH  LIP   HIKE  FACTOR
NO.   (FT)     (FT)    SIDE / SIDE/ WAY    (FT)    (FT)  (FT)  (FT)    (n)
===  =====  =========  =================  ======  ===== ====== ===== =======
  1   30.0     20.0    0.018/0.018/0.020   0.67    2.00 0.0313 0.167 0.0150

  GLOBAL STREET FLOW-DEPTH CONSTRAINTS:
    1. Relative Flow-Depth =  0.00 FEET
       as (Maximum Allowable Street Flow Depth) - (Top-of-Curb)
    2. (Depth)*(Velocity) Constraint =  6.0 (FT*FT/S)
  *SIZE PIPE WITH A FLOW CAPACITY GREATER THAN
   OR EQUAL TO THE UPSTREAM TRIBUTARY PIPE.*

**************************************************************************
  FLOW PROCESS FROM NODE    403.00 TO NODE    404.00 IS CODE =  21
--------------------------------------------------------------------------
  >>>>>RATIONAL METHOD INITIAL SUBAREA ANALYSIS<<<<<
==========================================================================
  *USER SPECIFIED(SUBAREA):
  OPEN BRUSH FAIR COVER RUNOFF COEFFICIENT = .3500
  S.C.S. CURVE NUMBER (AMC II) =   0
  INITIAL SUBAREA FLOW-LENGTH(FEET) =    20.00
  UPSTREAM ELEVATION(FEET) =   1128.00
  DOWNSTREAM ELEVATION(FEET) =   1124.00
  ELEVATION DIFFERENCE(FEET) =      4.00
  SUBAREA OVERLAND TIME OF FLOW(MIN.) =    2.803
  WARNING: THE MAXIMUM OVERLAND FLOW SLOPE, 10.%, IS USED IN Tc CALCULATION!
```

```
 100 YEAR RAINFALL INTENSITY(INCH/HOUR) =  8.168
 NOTE: RAINFALL INTENSITY IS BASED ON Tc = 5-MINUTE.
 SUBAREA RUNOFF(CFS) =      0.17
 TOTAL AREA(ACRES) =      0.06   TOTAL RUNOFF(CFS) =      0.17

****************************************************************************
 FLOW PROCESS FROM NODE    404.00 TO NODE    402.00 IS CODE =  52
----------------------------------------------------------------------------
 >>>>>COMPUTE NATURAL VALLEY CHANNEL FLOW<<<<<
 >>>>>TRAVELTIME THRU SUBAREA<<<<<
============================================================================
 ELEVATION DATA: UPSTREAM(FEET) =   1124.00  DOWNSTREAM(FEET) =   1079.00
 CHANNEL LENGTH THRU SUBAREA(FEET) =   230.00   CHANNEL SLOPE =  0.1957
 NOTE: CHANNEL FLOW OF 1. CFS WAS ASSUMED IN VELOCITY ESTIMATION
 NOTE: CHANNEL SLOPE OF .1 WAS ASSUMED IN VELOCITY ESTIMATION
 CHANNEL FLOW THRU SUBAREA(CFS) =       0.17
 FLOW VELOCITY(FEET/SEC) =   4.74 (PER LACFCD/RCFC&WCD HYDROLOGY MANUAL)
 TRAVEL TIME(MIN.) =   0.81   Tc(MIN.) =    3.61
 LONGEST FLOWPATH FROM NODE    403.00 TO NODE    402.00 =     250.00 FEET.

****************************************************************************
 FLOW PROCESS FROM NODE    402.00 TO NODE    402.00 IS CODE =   1
----------------------------------------------------------------------------
 >>>>>DESIGNATE INDEPENDENT STREAM FOR CONFLUENCE<<<<<
============================================================================
 TOTAL NUMBER OF STREAMS =  2
 CONFLUENCE VALUES USED FOR INDEPENDENT STREAM  1 ARE:
 TIME OF CONCENTRATION(MIN.) =    3.61
 RAINFALL INTENSITY(INCH/HR) =   8.17
 TOTAL STREAM AREA(ACRES) =     0.06
 PEAK FLOW RATE(CFS) AT CONFLUENCE =      0.17

****************************************************************************
 FLOW PROCESS FROM NODE    401.00 TO NODE    402.00 IS CODE =  21
----------------------------------------------------------------------------
 >>>>>RATIONAL METHOD INITIAL SUBAREA ANALYSIS<<<<<
============================================================================
 *USER SPECIFIED(SUBAREA):
 OPEN BRUSH FAIR COVER RUNOFF COEFFICIENT = .3500
 S.C.S. CURVE NUMBER (AMC II) =   0
 INITIAL SUBAREA FLOW-LENGTH(FEET) =    80.00
 UPSTREAM ELEVATION(FEET) =   1087.00
 DOWNSTREAM ELEVATION(FEET) =   1079.00
 ELEVATION DIFFERENCE(FEET) =      8.00
 SUBAREA OVERLAND TIME OF FLOW(MIN.) =    5.605
 WARNING: THE MAXIMUM OVERLAND FLOW SLOPE, 10.%, IS USED IN Tc CALCULATION!
  100 YEAR RAINFALL INTENSITY(INCH/HOUR) =  7.588
 SUBAREA RUNOFF(CFS) =      0.21
 TOTAL AREA(ACRES) =      0.08   TOTAL RUNOFF(CFS) =      0.21

****************************************************************************
 FLOW PROCESS FROM NODE    402.00 TO NODE    402.00 IS CODE =   1
----------------------------------------------------------------------------
 >>>>>DESIGNATE INDEPENDENT STREAM FOR CONFLUENCE<<<<<
 >>>>>AND COMPUTE VARIOUS CONFLUENCED STREAM VALUES<<<<<
============================================================================
 TOTAL NUMBER OF STREAMS =  2
 CONFLUENCE VALUES USED FOR INDEPENDENT STREAM  2 ARE:
 TIME OF CONCENTRATION(MIN.) =    5.61
 RAINFALL INTENSITY(INCH/HR) =   7.59
 TOTAL STREAM AREA(ACRES) =     0.08
 PEAK FLOW RATE(CFS) AT CONFLUENCE =      0.21
```

```
  ** CONFLUENCE DATA **
  STREAM     RUNOFF       Tc      INTENSITY      AREA
  NUMBER      (CFS)     (MIN.)   (INCH/HOUR)    (ACRE)
      1        0.17     3.61        8.168          0.06
      2        0.21     5.61        7.588          0.08

  RAINFALL INTENSITY AND TIME OF CONCENTRATION RATIO
  CONFLUENCE FORMULA USED FOR  2 STREAMS.

  ** PEAK FLOW RATE TABLE **
  STREAM     RUNOFF      Tc      INTENSITY
  NUMBER      (CFS)    (MIN.)   (INCH/HOUR)
      1        0.31     3.61       8.168
      2        0.37     5.61       7.588

  COMPUTED CONFLUENCE ESTIMATES ARE AS FOLLOWS:
  PEAK FLOW RATE(CFS) =       0.37   Tc(MIN.) =    5.61
  TOTAL AREA(ACRES) =        0.1
  LONGEST FLOWPATH FROM NODE    403.00 TO NODE    402.00 =     250.00 FEET.
============================================================================
  END OF STUDY SUMMARY:
  TOTAL AREA(ACRES)     =        0.1  TC(MIN.) =      5.61
  PEAK FLOW RATE(CFS)   =       0.37
============================================================================
============================================================================
  END OF RATIONAL METHOD ANALYSIS
```

♀

```
**************************************************************************

            RATIONAL METHOD HYDROLOGY COMPUTER PROGRAM PACKAGE
            Reference: SAN DIEGO COUNTY FLOOD CONTROL DISTRICT
                         2003,1985,1981 HYDROLOGY MANUAL
          (c) Copyright 1982-2010 Advanced Engineering Software (aes)
              Ver. 17.0 Release Date: 07/01/2010  License ID 1355

                              Analysis prepared by:

                                 Fuscoe Engineering, Inc.
                              6390 Greenwich Drive, Suite 170
                                    San Diego, CA 92122


 ************************** DESCRIPTION OF STUDY **************************
* RANCHO CIELO PARCEL H                                                   *
* 100-YEAR HYDROLOGY PROPOSED CONDITIONS BASIN 5                          *
* 04-09-13  02711-001-01                                                  *
 **************************************************************************

  FILE NAME: RCPR5.DAT
  TIME/DATE OF STUDY: 11:26 04/09/2013
--------------------------------------------------------------------------
  USER SPECIFIED HYDROLOGY AND HYDRAULIC MODEL INFORMATION:
--------------------------------------------------------------------------
  2003 SAN DIEGO MANUAL CRITERIA

  USER SPECIFIED STORM EVENT(YEAR) = 100.00
  6-HOUR DURATION PRECIPITATION (INCHES) =   3.100
  SPECIFIED MINIMUM PIPE SIZE(INCH) =  18.00
  SPECIFIED PERCENT OF GRADIENTS(DECIMAL) TO USE FOR FRICTION SLOPE = 0.95
  SAN DIEGO HYDROLOGY MANUAL "C"-VALUES USED FOR RATIONAL METHOD
  NOTE: USE MODIFIED RATIONAL METHOD PROCEDURES FOR CONFLUENCE ANALYSIS
  *USER-DEFINED STREET-SECTIONS FOR COUPLED PIPEFLOW AND STREETFLOW MODEL*
     HALF-  CROWN TO   STREET-CROSSFALL:   CURB  GUTTER-GEOMETRIES:  MANNING
     WIDTH  CROSSFALL  IN-  / OUT-/PARK-  HEIGHT  WIDTH  LIP   HIKE  FACTOR
NO.   (FT)     (FT)    SIDE / SIDE/ WAY    (FT)    (FT)  (FT)  (FT)    (n)
===  =====  =========  =================  ======  ===== ====== ===== =======
  1   30.0     20.0    0.018/0.018/0.020   0.67    2.00 0.0313 0.167 0.0150

  GLOBAL STREET FLOW-DEPTH CONSTRAINTS:
    1. Relative Flow-Depth =  0.00 FEET
       as (Maximum Allowable Street Flow Depth) - (Top-of-Curb)
    2. (Depth)*(Velocity) Constraint =  6.0 (FT*FT/S)
  *SIZE PIPE WITH A FLOW CAPACITY GREATER THAN
   OR EQUAL TO THE UPSTREAM TRIBUTARY PIPE.*

**************************************************************************
  FLOW PROCESS FROM NODE    501.00 TO NODE    502.00 IS CODE =  21
--------------------------------------------------------------------------
  >>>>>RATIONAL METHOD INITIAL SUBAREA ANALYSIS<<<<<
==========================================================================
  *USER SPECIFIED(SUBAREA):
  OPEN BRUSH FAIR COVER RUNOFF COEFFICIENT = .3500
  S.C.S. CURVE NUMBER (AMC II) =   0
  INITIAL SUBAREA FLOW-LENGTH(FEET) =    50.00
  UPSTREAM ELEVATION(FEET) =   1124.00
  DOWNSTREAM ELEVATION(FEET) =   1114.00
  ELEVATION DIFFERENCE(FEET) =     10.00
  SUBAREA OVERLAND TIME OF FLOW(MIN.) =    4.431
  WARNING: THE MAXIMUM OVERLAND FLOW SLOPE, 10.%, IS USED IN Tc CALCULATION!
```

```
 100 YEAR RAINFALL INTENSITY(INCH/HOUR) =  8.168
NOTE: RAINFALL INTENSITY IS BASED ON Tc = 5-MINUTE.
SUBAREA RUNOFF(CFS) =      0.11
TOTAL AREA(ACRES) =      0.04   TOTAL RUNOFF(CFS) =      0.11

****************************************************************************
FLOW PROCESS FROM NODE    502.00 TO NODE    503.00 IS CODE =  91
----------------------------------------------------------------------------
>>>>>COMPUTE "V" GUTTER FLOW TRAVEL TIME THRU SUBAREA<<<<<
============================================================================
UPSTREAM NODE ELEVATION(FEET) =   1114.00
DOWNSTREAM NODE ELEVATION(FEET) =   1110.00
CHANNEL LENGTH THRU SUBAREA(FEET) =   150.00
"V" GUTTER WIDTH(FEET) =   3.00   GUTTER HIKE(FEET) =  0.500
PAVEMENT LIP(FEET) =  0.100   MANNING'S N = .0150
PAVEMENT CROSSFALL(DECIMAL NOTATION) = 0.02000
MAXIMUM DEPTH(FEET) =   0.61
 100 YEAR RAINFALL INTENSITY(INCH/HOUR) =  8.168
NOTE: RAINFALL INTENSITY IS BASED ON Tc = 5-MINUTE.
*USER SPECIFIED(SUBAREA):
OPEN BRUSH FAIR COVER RUNOFF COEFFICIENT = .3500
S.C.S. CURVE NUMBER (AMC II) =   0
TRAVEL TIME COMPUTED USING ESTIMATED FLOW(CFS) =      0.30
TRAVEL TIME THRU SUBAREA BASED ON VELOCITY(FEET/SEC.) =   6.20
AVERAGE FLOW DEPTH(FEET) =   0.50   FLOOD WIDTH(FEET) =    3.00
"V" GUTTER FLOW TRAVEL TIME(MIN.) =   0.40   Tc(MIN.) =    4.83
SUBAREA AREA(ACRES) =    0.13       SUBAREA RUNOFF(CFS) =    0.37
AREA-AVERAGE RUNOFF COEFFICIENT =  0.350
TOTAL AREA(ACRES) =        0.2         PEAK FLOW RATE(CFS) =       0.49

       NOTE:TRAVEL TIME ESTIMATES BASED ON NORMAL DEPTH
       IN A FLOWING-FULL GUTTER(NORMAL DEPTH = GUTTER HIKE)


END OF SUBAREA "V" GUTTER HYDRAULICS:
DEPTH(FEET) =  0.50   FLOOD WIDTH(FEET) =    3.00
FLOW VELOCITY(FEET/SEC.) =   6.20   DEPTH*VELOCITY(FT*FT/SEC) =   3.10
LONGEST FLOWPATH FROM NODE    501.00 TO NODE    503.00 =     200.00 FEET.
============================================================================
END OF STUDY SUMMARY:
TOTAL AREA(ACRES)     =        0.2  TC(MIN.) =      4.83
PEAK FLOW RATE(CFS)   =       0.49
============================================================================
============================================================================
END OF RATIONAL METHOD ANALYSIS
```

♀

APPENDIX 3

Detention Basin Calculations

Detention Basin: Basin 1.1

Q100 In = 13.5 cfs

Q100 Out = 1 cfs

Detention Basin Discharge

Outlet Perforations:	1.5	in. @ bottom	5	in. @	3.5 ft above bottom
Orifice Area, each outlet:	0.012	sq.ft.	0.136	sq.ft.	

Stage, Discharge & Storage Table for Basin 1.1

Stage	Surface Area (sf)	Storage (cf)	Storage (Af)	Q Total	Q Avg	Drawdown (hr)
0	1767	0	0.000	0.00	0.02	13.56
0.5	2048	954	0.022	0.04	0.05	6.33
1	2335	2,051	0.047	0.06	0.06	5.41
1.5	2628	3,296	0.076	0.07	0.08	5.07
2	2927	4,694	0.108	0.08	0.09	4.96
2.5	3233	6,250	0.143	0.09	0.10	4.93
3	3544	7,967	0.183	0.10	0.11	4.97
3.5	3863	9,853	0.226	0.11	0.29	1.97
4	4187	11,908	0.273	0.47	0.59	1.05
4.5	4518	14,141	0.325	0.71	0.79	0.85
5	4855	16,555	0.380	0.88	0.91	0.39
5.25	5026	17,832	0.409	0.95		
5.5	5198	19,154	0.440	1.02		
6	5548	21,945	0.504	1.14		
					Total	49.5

Orifice Calculations for Basin 1.1

Discharge at Depth =		6 ft					
Outlet Row	Co	Ao	H	Q	# of Oultets	Q Row	
O1		0.6	0.136	2.29	0.99	1	0.99
O2		0.6	0.012	5.94	0.14	1	0.14
					Q total		1.14

Discharge at Depth =		5.5 ft					
Outlet Row	Co	Ao	H	Q	# of Oultets	Q Row	
O1		0.6	0.136	1.79	0.88	1	0.88
O2		0.6	0.012	5.44	0.14	1	0.14
					Q total		1.02

Discharge at Depth =		5.25 ft					
Outlet Row	Co	Ao	H	Q	# of Oultets	Q Row	
O1		0.6	0.136	1.54	0.81	1	0.81
O2		0.6	0.012	5.19	0.13	1	0.13
					Q total		0.95

Discharge at Depth =		5 ft					
Outlet Row	Co	Ao	H	Q	# of Oultets	Q Row	
O1		0.6	0.136	1.29	0.75	1	0.75
O2		0.6	0.012	4.94	0.13	1	0.13
					Q total		0.88

Discharge at Depth =		4.5 ft					
Outlet Row	Co	Ao	H	Q	# of Oultets	Q Row	
O1		0.6	0.136	0.79	0.58	1	0.58
O2		0.6	0.012	4.44	0.12	1	0.12
					Q total		0.71

Discharge at Depth =		4 ft					
Outlet Row	Co	Ao	H	Q	# of Oultets	Q Row	
O1		0.6	0.136	0.29	0.35	1	0.35
O2		0.6	0.012	3.94	0.12	1	0.12
					Q total		0.47

Discharge at Depth =		3.5 ft					
Outlet Row	Co	Ao	H	Q	# of Oultets	Q Row	
O1		0.6	0.136		0.00	1	0.00
O2		0.6	0.012	3.44	0.11	1	0.11
					Q total		0.11

Discharge at Depth =		3 ft					
Outlet Row	Co	Ao	H	Q	# of Oultets	Q Row	
O1		0.6	0.136		0.00	1	0.00
O2		0.6	0.012	2.94	0.10	1	0.10
					Q total		0.10

Discharge at Depth =		2.5 ft					
Outlet Row	Co	Ao	H	Q	# of Oultets	Q Row	
O1		0.6	0.136		0.00	1	0.00
O2		0.6	0.012	2.44	0.09	1	0.09
					Q total		0.09

Discharge at Depth =		2 ft					
Outlet Row	Co	Ao	H	Q	# of Oultets	Q Row	
O1		0.6	0.136		0.00	1	0.00
O2		0.6	0.012	1.94	0.08	1	0.08
					Q total		0.08

Discharge at Depth =		1.5 ft					
Outlet Row	Co	Ao	H	Q	# of Oultets	Q Row	
O1		0.6	0.136		0.00	1	0.00
O2		0.6	0.012	1.44	0.07	1	0.07
					Q total		0.07

Discharge at Depth =		1 ft					
Outlet Row	Co	Ao	H	Q	# of Oultets	Q Row	
O1		0.6	0.136		0.00	1	0.00
O2		0.6	0.012	0.94	0.06	1	0.06
					Q total		0.06

Discharge at Depth =		0.5 ft					
Outlet Row	Co	Ao	H	Q	# of Oultets	Q Row	
O1		0.6	0.136		0.00	1	0.00
O2		0.6	0.012	0.44	0.04	1	0.04
					Q total		0.04

RATIONAL METHOD HYDROGRAPH PROGRAM
COPYRIGHT 1992, 2001 RICK ENGINEERING COMPANY

RUN DATE 4/9/2013
HYDROGRAPH FILE NAME Text1
TIME OF CONCENTRATION 7 MIN.
6 HOUR RAINFALL 3.1 INCHES
BASIN AREA 3.82 ACRES
RUNOFF COEFFICIENT 0.55
PEAK DISCHARGE 13.5 CFS

TIME (MIN) = 0	DISCHARGE (CFS) = 0
TIME (MIN) = 7	DISCHARGE (CFS) = 0.4
TIME (MIN) = 14	DISCHARGE (CFS) = 0.4
TIME (MIN) = 21	DISCHARGE (CFS) = 0.4
TIME (MIN) = 28	DISCHARGE (CFS) = 0.4
TIME (MIN) = 35	DISCHARGE (CFS) = 0.4
TIME (MIN) = 42	DISCHARGE (CFS) = 0.4
TIME (MIN) = 49	DISCHARGE (CFS) = 0.4
TIME (MIN) = 56	DISCHARGE (CFS) = 0.5
TIME (MIN) = 63	DISCHARGE (CFS) = 0.5
TIME (MIN) = 70	DISCHARGE (CFS) = 0.5
TIME (MIN) = 77	DISCHARGE (CFS) = 0.5
TIME (MIN) = 84	DISCHARGE (CFS) = 0.5
TIME (MIN) = 91	DISCHARGE (CFS) = 0.5
TIME (MIN) = 98	DISCHARGE (CFS) = 0.5
TIME (MIN) = 105	DISCHARGE (CFS) = 0.6
TIME (MIN) = 112	DISCHARGE (CFS) = 0.6
TIME (MIN) = 119	DISCHARGE (CFS) = 0.6
TIME (MIN) = 126	DISCHARGE (CFS) = 0.6
TIME (MIN) = 133	DISCHARGE (CFS) = 0.6
TIME (MIN) = 140	DISCHARGE (CFS) = 0.7
TIME (MIN) = 147	DISCHARGE (CFS) = 0.7
TIME (MIN) = 154	DISCHARGE (CFS) = 0.7
TIME (MIN) = 161	DISCHARGE (CFS) = 0.8
TIME (MIN) = 168	DISCHARGE (CFS) = 0.8
TIME (MIN) = 175	DISCHARGE (CFS) = 0.9
TIME (MIN) = 182	DISCHARGE (CFS) = 0.9
TIME (MIN) = 189	DISCHARGE (CFS) = 1
TIME (MIN) = 196	DISCHARGE (CFS) = 1.1
TIME (MIN) = 203	DISCHARGE (CFS) = 1.2
TIME (MIN) = 210	DISCHARGE (CFS) = 1.3
TIME (MIN) = 217	DISCHARGE (CFS) = 1.6
TIME (MIN) = 224	DISCHARGE (CFS) = 1.9
TIME (MIN) = 231	DISCHARGE (CFS) = 2.7
TIME (MIN) = 238	DISCHARGE (CFS) = 4.2
TIME (MIN) = 245	DISCHARGE (CFS) = 13.5
TIME (MIN) = 252	DISCHARGE (CFS) = 2.2
TIME (MIN) = 259	DISCHARGE (CFS) = 1.5
TIME (MIN) = 266	DISCHARGE (CFS) = 1.1
TIME (MIN) = 273	DISCHARGE (CFS) = 1
TIME (MIN) = 280	DISCHARGE (CFS) = 0.8
TIME (MIN) = 287	DISCHARGE (CFS) = 0.7
TIME (MIN) = 294	DISCHARGE (CFS) = 0.7
TIME (MIN) = 301	DISCHARGE (CFS) = 0.6
TIME (MIN) = 308	DISCHARGE (CFS) = 0.6
TIME (MIN) = 315	DISCHARGE (CFS) = 0.5
TIME (MIN) = 322	DISCHARGE (CFS) = 0.5
TIME (MIN) = 329	DISCHARGE (CFS) = 0.5
TIME (MIN) = 336	DISCHARGE (CFS) = 0.5
TIME (MIN) = 343	DISCHARGE (CFS) = 0.4
TIME (MIN) = 350	DISCHARGE (CFS) = 0.4
TIME (MIN) = 357	DISCHARGE (CFS) = 0.4
TIME (MIN) = 364	DISCHARGE (CFS) = 0

```
**************************************************************************
                HYDRAULICS ELEMENTS - II  PROGRAM PACKAGE

                 STORAGE BASIN HYDROGRAPH ROUTING MODEL
**************************************************************************
        (c) Copyright 1983-2010 Advanced Engineering Software (aes)
            Ver. 17.0  Release Date: 07/01/2010  License ID 1355

                          Analysis prepared by:

                            Fuscoe Engineering, Inc.
                          6390 Greenwich Drive, Suite 170
                               San Diego, CA 92122


 ************************* DESCRIPTION OF STUDY *************************
* RANCHO CIELO PARCEL H                                                 *
* 100-YEAR HYDROLOGY - DETENTION BASIN 1.1                              *
* 04-09-13  02711-001-01                                                *
 ************************************************************************

    FILE NAME: RCDET.DAT
    TIME/DATE OF STUDY: 15:26 04/09/2013
========================================================================
    ENTERED INFORMATION:
------------------------------------------------------------------------
    TOTAL NUMBER OF INFLOW HYDROGRAPH INTERVALS =   53
    CONSTANT HYDROGRAPH TIME UNIT(MINUTES) =    7.000
    ASSUMED INITIAL DEPTH(FEET) IN STORAGE BASIN =    0.00
------------------------------------------------------------------------
    ENTERED INFLOW HYDROGRAPH ORDINATES(CFS):
    *INTERVAL    FLOW   *INTERVAL    FLOW   *INTERVAL    FLOW   *
    * NUMBER     (CFS)  * NUMBER     (CFS)  * NUMBER     (CFS)  *
    *    1:         0.00*    2:         0.40*    3:         0.40*
    *    4:         0.40*    5:         0.40*    6:         0.40*
    *    7:         0.40*    8:         0.40*    9:         0.50*
    *   10:         0.50*   11:         0.50*   12:         0.50*
    *   13:         0.50*   14:         0.50*   15:         0.50*
    *   16:         0.60*   17:         0.60*   18:         0.60*
    *   19:         0.60*   20:         0.60*   21:         0.70*
    *   22:         0.70*   23:         0.70*   24:         0.80*
    *   25:         0.80*   26:         0.90*   27:         0.90*
    *   28:         1.00*   29:         1.10*   30:         1.20*
    *   31:         1.30*   32:         1.60*   33:         1.90*
    *   34:         2.70*   35:         4.20*   36:        13.50*
    *   37:         2.20*   38:         1.50*   39:         1.10*
    *   40:         1.00*   41:         0.80*   42:         0.70*
    *   43:         0.70*   44:         0.60*   45:         0.60*
    *   46:         0.50*   47:         0.50*   48:         0.50*
    *   49:         0.50*   50:         0.40*   51:         0.40*
    *   52:         0.40*   53:         0.00*
========================================================================
    DEPTH-VS.-STORAGE AND DEPTH-VS.-DISCHARGE INFORMATION:
------------------------------------------------------------------------
    TOTAL NUMBER OF BASIN DEPTH INFORMATION ENTRIES =  13
------------------------------------------------------------------------
    *BASIN-DEPTH  STORAGE    OUTFLOW  **BASIN-DEPTH  STORAGE    OUTFLOW  *
    *   (FEET)  (ACRE-FEET)   (CFS)   **   (FEET)  (ACRE-FEET)   (CFS)   *
    *      0.000      0.000      0.000**      0.500      0.022      0.040*
    *      1.000      0.047      0.060**      1.500      0.076      0.070*
    *      2.000      0.108      0.080**      2.500      0.143      0.090*
    *      3.000      0.183      0.100**      3.500      0.226      0.110*
```

```
    *      4.000      0.273      0.470**      4.500      0.325      0.710*
    *      5.000      0.380      0.880**      5.500      0.440      1.020*
    *      6.000      0.504      1.140**
*******************************************************************************
-------------------------------------------------------------------------------
    INITIAL BASIN DEPTH(FEET) =    0.00
    INITIAL BASIN STORAGE(ACRE-FEET) =       0.00
    INITIAL BASIN OUTFLOW(CFS) =       0.00
-------------------------------------------------------------------------------
-------------------------------------------------------------------------------
    BASIN STORAGE, OUTFLOW AND DEPTH ROUTING VALUES:
     INTERVAL   {S-O*DT/2}   {S+O*DT/2}
      NUMBER   (ACRE-FEET) (ACRE-FEET)
          1      0.00000     0.00000
          2      0.02181     0.02219
          3      0.04671     0.04729
          4      0.07566     0.07634
          5      0.10761     0.10839
          6      0.14257     0.14343
          7      0.18252     0.18348
          8      0.22547     0.22653
          9      0.27073     0.27527
         10      0.32158     0.32842
         11      0.37576     0.38424
         12      0.43508     0.44492
         13      0.49850     0.50950
    WHERE S=STORAGE(AF);O=OUTFLOW(AF/MIN.);DT=UNIT(MIN.)
-------------------------------------------------------------------------------
```

```
        *UNIT-HYDROGRAPH STORAGE-BASIN ROUTING*
    NOTE: COMPUTED BASIN DEPTH, OUTFLOW, AND STORAGE QUANTITIES
          OCCUR AT THE GIVEN TIME. BASIN INFLOW VALUES REPRESENT THE
          AVERAGE INFLOW DURING THE RECENT HYDROGRAPH UNIT INTERVAL.

    GRAPH NOTATION: "I"=MEAN UNIT INFLOW; "O"=OUTFLOW AT GIVEN TIME
-------------------------------------------------------------------------------
     TIME   INFLOW  OUTFLOW    STORAGE
    (HOURS) (CFS)    (CFS)    (ACRE-FT)  0.      3.      7.     10.     14.
       0.12     0.00     0.00       0.000 O       .       .       .       .
         [BASIN DEPTH(FEET) =    0.00]
       0.23     0.40     0.01       0.004 O       .       .       .       .
         [BASIN DEPTH(FEET) =    0.09]
       0.35     0.40     0.01       0.008 O       .       .       .       .
         [BASIN DEPTH(FEET) =    0.17]
       0.47     0.40     0.02       0.011 O       .       .       .       .
         [BASIN DEPTH(FEET) =    0.26]
       0.58     0.40     0.03       0.015 O       .       .       .       .
         [BASIN DEPTH(FEET) =    0.34]
       0.70     0.40     0.03       0.018 O       .       .       .       .
         [BASIN DEPTH(FEET) =    0.42]
       0.82     0.40     0.04       0.022 O       .       .       .       .
         [BASIN DEPTH(FEET) =    0.50]
       0.93     0.40     0.04       0.025 O       .       .       .       .
         [BASIN DEPTH(FEET) =    0.57]
       1.05     0.50     0.05       0.030 OI      .       .       .       .
         [BASIN DEPTH(FEET) =    0.66]
       1.17     0.50     0.05       0.034 OI      .       .       .       .
         [BASIN DEPTH(FEET) =    0.74]
       1.28     0.50     0.05       0.038 OI      .       .       .       .
```

```
  [BASIN DEPTH(FEET) =    0.83]
1.40     0.50     0.06       0.043 OI      .       .       .       .
  [BASIN DEPTH(FEET) =    0.92]
1.52     0.50     0.06       0.047 OI      .       .       .       .
  [BASIN DEPTH(FEET) =    1.00]
1.63     0.50     0.06       0.051 OI      .       .       .       .
  [BASIN DEPTH(FEET) =    1.07]
1.75     0.50     0.06       0.056 OI      .       .       .       .
  [BASIN DEPTH(FEET) =    1.15]
1.87     0.60     0.06       0.061 OI      .       .       .       .
  [BASIN DEPTH(FEET) =    1.24]
1.98     0.60     0.07       0.066 OI      .       .       .       .
  [BASIN DEPTH(FEET) =    1.32]
2.10     0.60     0.07       0.071 OI      .       .       .       .
  [BASIN DEPTH(FEET) =    1.41]
2.22     0.60     0.07       0.076 OI      .       .       .       .
  [BASIN DEPTH(FEET) =    1.50]
2.33     0.60     0.07       0.081 OI      .       .       .       .
  [BASIN DEPTH(FEET) =    1.58]
2.45     0.70     0.07       0.087 OI      .       .       .       .
  [BASIN DEPTH(FEET) =    1.68]
2.57     0.70     0.08       0.093 OI      .       .       .       .
  [BASIN DEPTH(FEET) =    1.77]
2.68     0.70     0.08       0.099 OI      .       .       .       .
  [BASIN DEPTH(FEET) =    1.86]
2.80     0.80     0.08       0.106 OI      .       .       .       .
  [BASIN DEPTH(FEET) =    1.97]
2.92     0.80     0.08       0.113 OI      .       .       .       .
  [BASIN DEPTH(FEET) =    2.07]
3.03     0.90     0.08       0.121 O I     .       .       .       .
  [BASIN DEPTH(FEET) =    2.19]
3.15     0.90     0.09       0.129 O I     .       .       .       .
  [BASIN DEPTH(FEET) =    2.30]
3.27     1.00     0.09       0.138 O I     .       .       .       .
  [BASIN DEPTH(FEET) =    2.42]
3.38     1.10     0.09       0.147 O I     .       .       .       .
  [BASIN DEPTH(FEET) =    2.56]
3.50     1.20     0.09       0.158 O I     .       .       .       .
  [BASIN DEPTH(FEET) =    2.69]
3.62     1.30     0.10       0.170 O  I    .       .       .       .
  [BASIN DEPTH(FEET) =    2.83]
3.73     1.60     0.10       0.184 O  I    .       .       .       .
  [BASIN DEPTH(FEET) =    3.01]
3.85     1.90     0.10       0.202 O   I   .       .       .       .
  [BASIN DEPTH(FEET) =    3.22]
3.97     2.70     0.11       0.227 O     I .       .       .       .
  [BASIN DEPTH(FEET) =    3.51]
4.08     4.20     0.41       0.265 O       .I      .       .       .
  [BASIN DEPTH(FEET) =    3.91]
4.20    13.50     0.90       0.388 . O     .       .       .       I
  [BASIN DEPTH(FEET) =    5.07]
4.32     2.20     0.93       0.401 . O  I  .       .       .       .
  [BASIN DEPTH(FEET) =    5.17]
4.43     1.50     0.94       0.406 . OI    .       .       .       .
  [BASIN DEPTH(FEET) =    5.22]
4.55     1.10     0.94       0.408 . O     .       .       .       .
  [BASIN DEPTH(FEET) =    5.23]
4.67     1.00     0.95       0.408 . O     .       .       .       .
  [BASIN DEPTH(FEET) =    5.24]
4.78     0.80     0.94       0.407 .IO     .       .       .       .
  [BASIN DEPTH(FEET) =    5.22]
4.90     0.70     0.94       0.405 .IO     .       .       .       .
  [BASIN DEPTH(FEET) =    5.20]
```

```
5.02     0.70     0.93       0.402 .IO     .       .       .       .
  [BASIN DEPTH(FEET) =    5.19]
5.13     0.60     0.92       0.399 .IO     .       .       .       .
  [BASIN DEPTH(FEET) =    5.16]
5.25     0.60     0.92       0.396 .IO     .       .       .       .
  [BASIN DEPTH(FEET) =    5.13]
5.37     0.50     0.91       0.392 .IO     .       .       .       .
  [BASIN DEPTH(FEET) =    5.10]
5.48     0.50     0.90       0.388 .IO     .       .       .       .
  [BASIN DEPTH(FEET) =    5.07]
5.60     0.50     0.89       0.384 .IO     .       .       .       .
  [BASIN DEPTH(FEET) =    5.04]
5.72     0.50     0.88       0.381 .IO     .       .       .       .
  [BASIN DEPTH(FEET) =    5.01]
5.83     0.40     0.87       0.376 I O     .       .       .       .
  [BASIN DEPTH(FEET) =    4.96]
5.95     0.40     0.85       0.372 I O     .       .       .       .
  [BASIN DEPTH(FEET) =    4.92]
6.07     0.40     0.84       0.367 IO      .       .       .       .
  [BASIN DEPTH(FEET) =    4.88]
6.18     0.00     0.82       0.359 IO      .       .       .       .
  [BASIN DEPTH(FEET) =    4.81]
6.30     0.00     0.79       0.352 IO      .       .       .       .
  [BASIN DEPTH(FEET) =    4.74]
6.42     0.00     0.77       0.344 IO      .       .       .       .
  [BASIN DEPTH(FEET) =    4.67]
6.53     0.00     0.75       0.337 IO      .       .       .       .
  [BASIN DEPTH(FEET) =    4.61]
6.65     0.00     0.72       0.330 IO      .       .       .       .
  [BASIN DEPTH(FEET) =    4.54]
6.77     0.00     0.70       0.323 IO      .       .       .       .
  [BASIN DEPTH(FEET) =    4.48]
6.88     0.00     0.67       0.316 IO      .       .       .       .
  [BASIN DEPTH(FEET) =    4.42]
7.00     0.00     0.64       0.310 IO      .       .       .       .
  [BASIN DEPTH(FEET) =    4.35]
```

♀

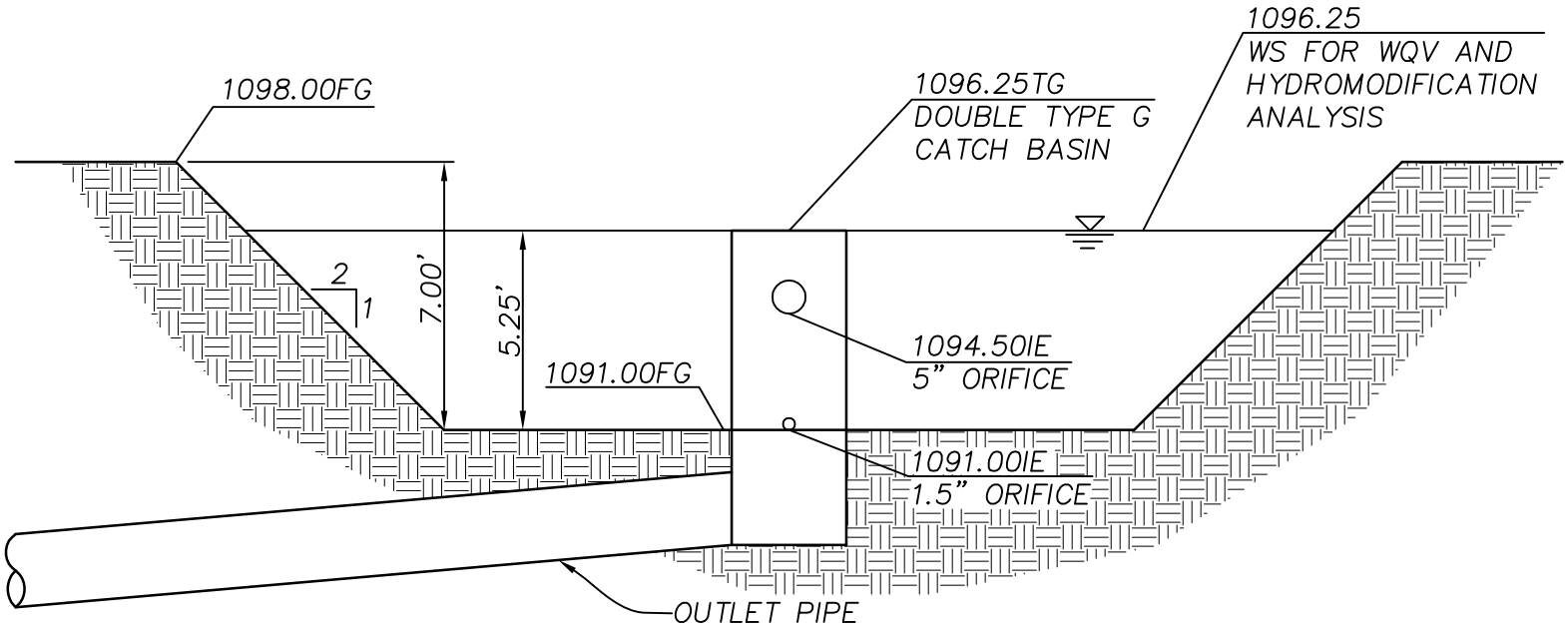

FUSCOE
ENGINEERING
6390 Greenwich Drive, Suite 170
San Diego, California 92122
tel 858.554.1500 ◦ fax 858.597.0335
www.fuscoe.com

IMP 1.1
OUTLET STRUCTURE DETAIL

NOT TO SCALE

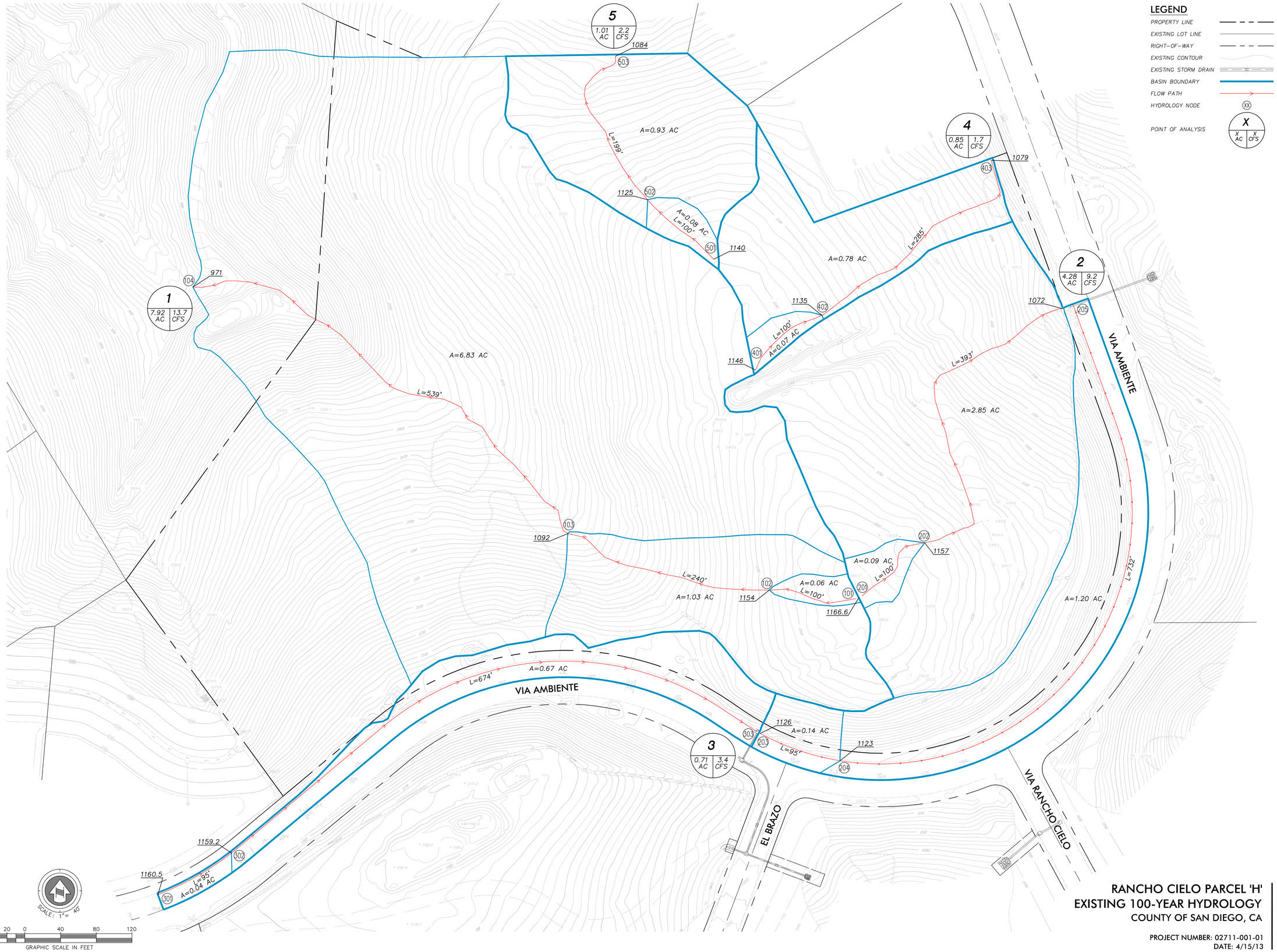

RANCHO CIELO PARCEL 'H'
EXISTING 100-YEAR HYDROLOGY
COUNTY OF SAN DIEGO, CA

PROJECT NUMBER: 02711-001-01
DATE: 4/15/13

FUSCOE ENGINEERING
6390 Greenwich Drive, Suite 170
San Diego, California 92122
tel 858.554.1500 • fax 858.597.0335
www.fuscoe.com

RANCHO CIELO PARCEL 'H'
PROPOSED 100-YEAR HYDROLOGY
COUNTY OF SAN DIEGO, CA

PROJECT NUMBER: 02711-001-01
DATE: 4/15/13

FUSCOE ENGINEERING
6390 Greenwich Drive, Suite 170
San Diego, California 92122
tel 858.554.1500 ▫ fax 858.597.0335
www.fuscoe.com